Polo 1995 ➤

4-cyl. Diesel engine, Mechanics									
Engine ID	AEF	AGD	AHG	AKU	ASX				

Edition 10.1999

Protected by copyright. Copying for private or commercial purposes, in part or in whole, is not permitted unless authorised by Volkswagen AG. Volkswagen AG does not guarantee or accept any liability with respect to the correctness of information in this document. Copyright by Volkswagen AG.

satelettronica

List of Workshop Manual Repair GroupsList of Workshop Manual Repair GroupsList of Workshop Manual Repair Groups

Polo 1995 ➤

4-cyl. Diesel engine, Mechanics

Repair Group

00 - Technical data
10 - Removing and installing engine
13 - Crankshaft group
15 - Cylinder head, Valve gear
17 - Lubrication
19 - Cooling system
20 - Fuel supply system
26 - Exhaust system

Protected by copyright. Copying for private or commercial purposes, in part or in whole, is not permitted unless authorised by Volkswagen AG. Volkswagen AG does not guarantee or accept any liability with respect to the correctness of information in this document. Copyright by Volkswagen AG.

satelettronica

Technical information should always be available to the foremen and mechanics, because their careful and constant adherence to the instructions is essential to ensure vehicle road-worthiness and safety. In addition, the normal basic safety precautions for working on motor vehicles must, as a matter of course, be observed.

All rights reserved.
No reproduction without prior agreement from publisher.

Copyright © 2010 Volkswagen AG, Wolfsburg

Contents

00 - Technical data 1
1 Technical data 1
1.1 Technical data 1
1.2 Engine number 1
1.3 Engine data 1
1.4 Engine data 2

10 - Removing and installing engine 3
1 Removing and installing engine 3
1.1 Removing and installing engine 3
1.2 Notes on removing 4
1.3 Securing engine to assembly stand 7
1.4 Notes on installing 7
1.5 Tightening torques 8
1.6 Assembly mountings 9

13 - Crankshaft group 11
1 Dismantling and assembling engine 11
1.1 Dismantling and assembling engine 11
1.2 Removing and installing ribbed belt 23
1.3 Checking semi-automatic toothed belt tensioning roller 24
1.4 Removing single part injection pump sprocket 25
2 Removing and installing sealing flange and flywheel 27
2.1 Removing and installing sealing flange and flywheel 27
2.2 Renewing crankshaft oil seal -pulley end 31
3 Removing and installing crankshaft 34
3.1 Removing and installing crankshaft 34
3.2 Crankshaft dimensions 37
4 Dismantling and assembling pistons and conrods 38
4.1 Dismantling and assembling pistons and conrods 38
4.2 Checking piston projection at TDC 45
4.3 Piston and cylinder dimensions 47

15 - Cylinder head, Valve gear 48
1 Removing and installing cylinder head 48
1.1 Removing and installing cylinder head 48
1.2 Removing and installing intake pipes 55
1.3 Removing, installing and tensioning toothed belt 57
1.4 Removing and installing cylinder head 67
1.5 Checking compression pressures 70
2 Servicing valve gear 74
2.1 Servicing valve gear 74
2.2 Reworking valve seats 80
2.3 Checking valve guides 82
2.4 Renewing valve guides 84
2.5 Renewing valve stem seals 85
2.6 Removing and installing camshaft 88
2.7 Checking hydraulic bucket tappets 90
2.8 Replacing swirl chambers 91

17 - Lubrication 93
1 Removing and installing parts of the lubrication system 93
1.1 Removing and installing parts of the lubrication system 93

Protected by copyright. Copying for private or commercial purposes, in any form and by any means, is not permitted unless authorised by Volkswagen AG. Volkswagen AG does not guarantee or accept any liability with respect to the correctness of information in this document. Copyright by Volkswagen AG.
satelettronica

1.2 Checking oil pressure and oil pressure switch . . . 101

19 - Cooling system . . . 104
1 Removing and installing parts of cooling system . . . 104
1.1 Removing and installing parts of cooling system . . . 104
1.2 Parts of cooling system body side . . . 105
1.3 Parts of cooling system engine side . . . 108
1.4 Removing and installing coolant pump and compact bracket . . . 112
1.5 Draining and filling cooling system . . . 115
1.6 Removing and installing radiator . . . 117

20 - Fuel supply system . . . 119
1 Removing and installing parts of fuel supply system . . . 119
1.1 Removing and installing parts of fuel supply system . . . 119
1.2 Removing and installing fuel tank with its attachments . . . 120
1.3 Servicing fuel filter . . . 126
1.4 Safety precautions when working on the fuel supply system . . . 128
1.5 Rules for cleanliness . . . 129
1.6 Removing and installing fuel tank . . . 129
2 Accelerator mechanism: Engine code AEF . . . 131
2.1 Accelerator mechanism: Engine code AEF . . . 131
2.2 Servicing accelerator mechanism . . . 131
3 Accelerator mechanism: > 09.99 (Engine codes AGD, AHG, AKU) . . . 134
3.1 Accelerator mechanism: > 09.99 (Engine codes AGD, AHG, AKU) . . . 134
3.2 Servicing accelerator mechanism . . . 134
3.3 Checking accelerator pedal position sender adjustment . . . 136
3.4 Checking accelerator pedal position sender . . . 138
4 Accelerator mechanism: 10.99 > (Engine codes AGD, AKU, ASX) . . . 142
4.1 Accelerator mechanism: 10.99 > (Engine codes AGD, AKU, ASX) . . . 142
4.2 Servicing accelerator mechanism . . . 143
4.3 Checking accelerator pedal position sender . . . 143
4.4 Accelerator mechanism: 10.99 > (RHD vehicles) . . . 146
4.5 Servicing accelerator mechanism . . . 146
4.6 Checking accelerator pedal position sender . . . 147
4.7 Adjusting pedal position sender . . . 150

26 - Exhaust system . . . 151
1 Removing and installing parts of exhaust system . . . 151
1.1 Removing and installing parts of exhaust system . . . 151
1.2 Exhaust manifold, front exhaust pipe and catalyst with attachments . . . 151
1.3 Silencer with mountings . . . 153
2 Exhaust gas recirculation system: Engine code AEF . . . 155
2.1 Exhaust gas recirculation system: Engine code AEF . . . 155
2.2 Removing and installing parts of exhaust gas recirculation system . . . 156
2.3 Checking exhaust gas recirculation . . . 157
2.4 Checking exhaust gas recirculation valve (mechanical) . . . 159
2.5 Checking EGR valve (electrical) . . . 159
3 Exhaust gas recirculation system: Engine codes AGD, AHG, AKU, ASX . . . 160
3.1 Exhaust gas recirculation system: Engine codes AGD, AHG, AKU, ASX . . . 160
3.2 Removing and installing parts of exhaust gas recirculation system . . . 161
3.3 Connection diagram for vacuum hoses . . . 163
3.4 Checking exhaust gas recirculation valve (mechanical) . . . 164
3.5 Checking EGR valve . . . 165

Protected by copyright. Copying for private or commercial purposes, in part or in whole, is not permitted unless authorised by Volkswagen AG. Volkswagen AG does not guarantee or accept any liability with respect to the correctness of information in this document. Copyright by Volkswagen AG.
satelettronica

00 - Technical data

1 - Technical data

1.1 - Technical data

1.2 - Engine number

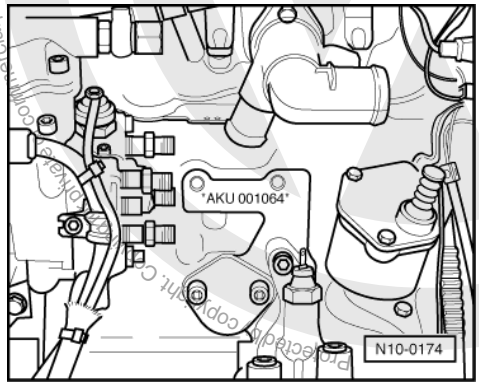

-> The engine number ("Code letters" and "Serial number") can be found between injection pump and vacuum pump on cylinder block.

Additionally there is a sticker on the toothed belt guard with "Engine code" and "Serial number".

The engine code is also included on the vehicle data plate.

1.3 - Engine data

Engine code		AEF	AGD	AHG
Manufactured		11.95 ▸	07.96 ▸	04.97 ▸
Exhaust emissions fulfil		MVEG II	MVEG II	MVEG II
Capacity	ltr.	1.9	1.9	1.7
Output	kW at rpm	47/4400	47/4200	42/4200
Torque	Nm at rpm	124/2000...3000	124/2200...2800	112/2200...2600
Bore	ø mm	79.5	79.5	79.5
Stroke	mm	95.5	95.5	86.4
Compression ratio		22.5	19.5	19.5
CN	min.	49	49	49
Firing order		1-3-4-2	1-3-4-2	1-3-4-2
Catalyst		x	x	x
Exhaust gas recirculation		x	x	x
Charging		-	-	-
Charge air cooling		-	-	-

satelettronica

1.4 - Engine data

Engine code		AKU	ASX
Manufactured		09.97 ▸	05.00 ▸
Exhaust emissions fulfil		D3 standard	EU 3 standard
Capacity	ltr.	1.7	1.9
Output	kW at rpm	44/4200	47/4200
Torque	Nm at rpm	115/2200...3000	124/2000...2800
Bore	ø mm	79.5	79.5
Stroke	mm	86.4	95.5
Compression ratio		19.5	19.5
CN	min.	49	49
Firing order		1-3-4-2	1-3-4-2
Catalyst		x	x
Exhaust gas recirculation		x	x
Charging		-	-
Charge air cooling		-	-

Protected by copyright. Copying for private or commercial purposes, in part or in whole, is not permitted unless authorised by Volkswagen AG. Volkswagen AG does not guarantee or accept any liability with respect to the correctness of information in this document. Copyright by Volkswagen AG.
satelettronica

10 - Removing and installing engine

Protected by copyright. Copyright by Volkswagen AG. Volkswagen AG does not guarantee or accept any liability with respect to the correctness of information in this document. Copyright by Volkswagen AG. Reproduction, in whole or in part or in other form, is not permitted unless authorised by Volkswagen AG. Volkswagen AG does not guarantee or accept any liability with respect to the correctness of information in this document. Copyright by Volkswagen AG.

1 - Removing and installing engine

1.1 - Removing and installing engine

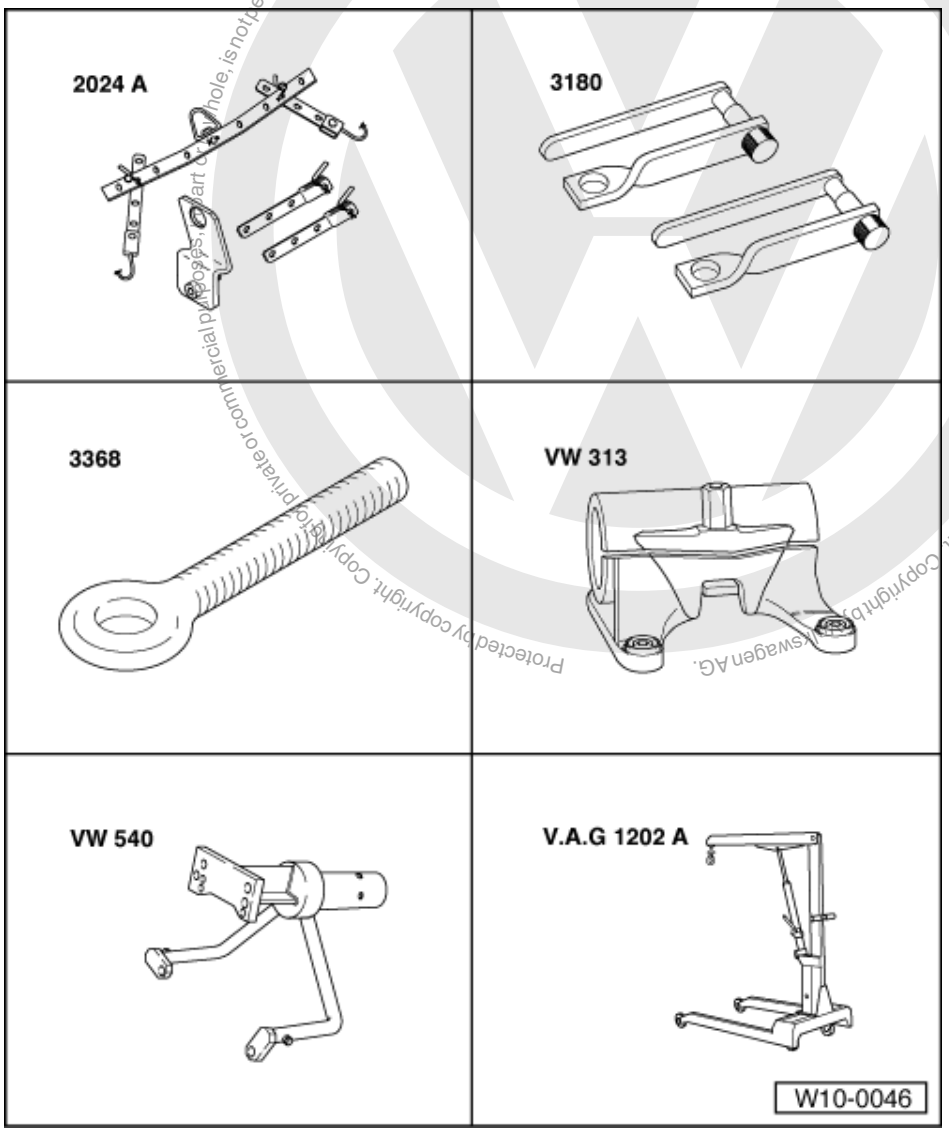

Special tools, workshop equipment, test and measuring appliances and auxiliary items required

- 2024 A Lifting tackle
- 3180 Retainer
- 3368 Special bolt
- VW 313 Support clamp
- VW 540 Engine and gearbox support
- V.A.G 1202 A Workshop crane

satelettronica

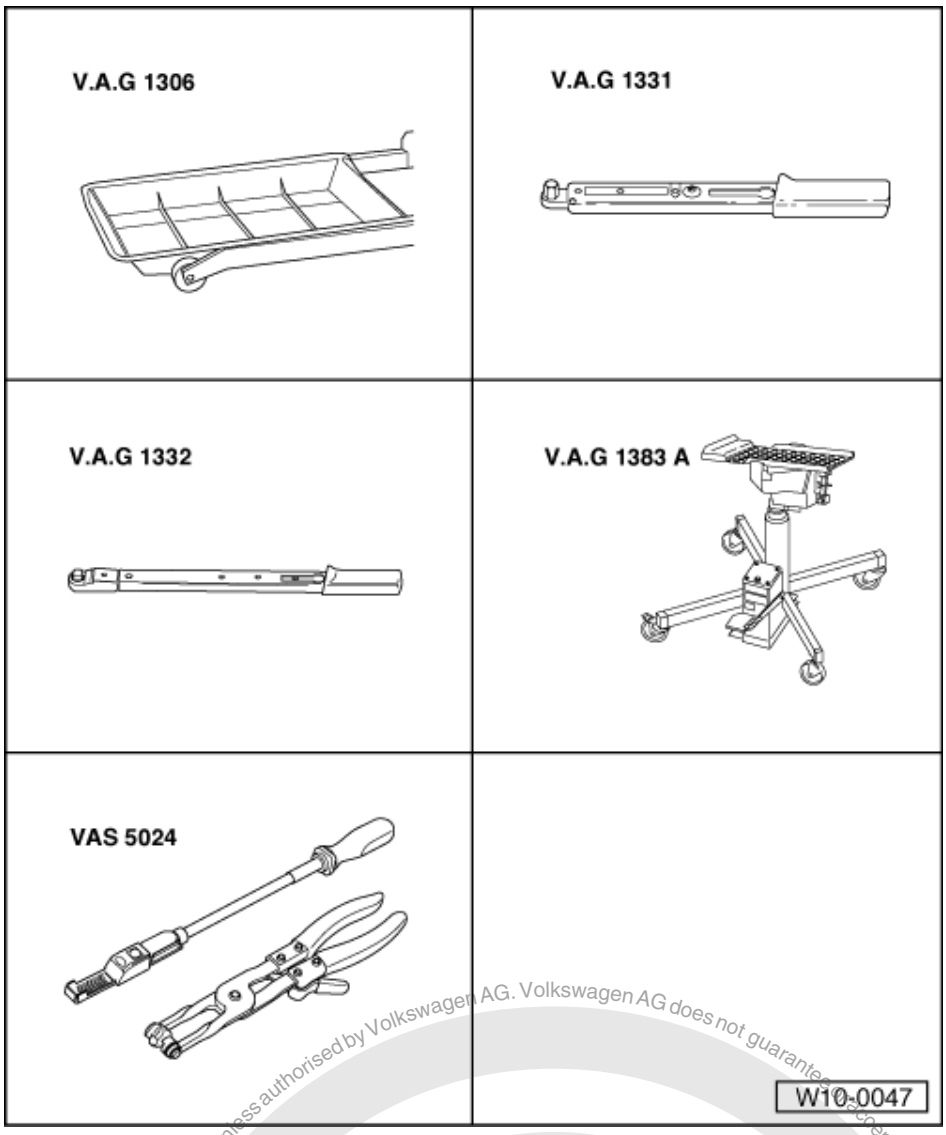

- V.A.G 1306 Drip tray
- V.A.G 1331 Torque wrench (5...50 Nm)
- V.A.G 1332 Torque wrench (40...200 Nm)
- V.A.G 1383 A Engine/gearbox jack
- VAS 5024 Assembly tool for spring-type clamps
- G 000 100 Grease
- Cable tie

1.2 - Notes on removing

- The engine is removed forwards together with the gearbox.
- All cable ties which are opened or cut open when removing engine, must be replaced in the same position when installing engine.
- Remove engine cover.

Note:

Check whether a coded radio is installed as during the forthcoming work sequences the battery earth strap must be disconnected. Obtain radio code first if necessary.

- With the ignition switched off disconnect battery earth strap.
- Remove battery and battery retainer.

Protected by copyright. Copying for private or commercial purposes, in part or in whole, is not permitted unless authorised by Volkswagen AG. Volkswagen AG does not guarantee or accept any liability with respect to the correctness of information in this document. Copyright by Volkswagen AG.
satelettronica

- Disconnect clutch cable:

=> 5-speed manual gearbox 085; Repair group 30; Servicing clutch mechanism Servicing clutch mechanism

- Remove connecting hose for air cleaner/air intake connecting piece.
- Remove intake manifold cover => Page 55 , Removing and installing intake manifold.

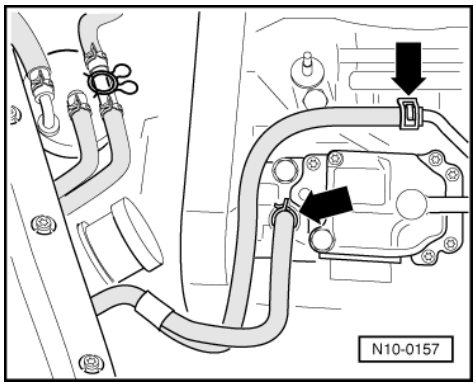

- -> Disconnect fuel supply and return pipes -arrows- at injector pump.
- Seal the pipes so that the fuel system is not contaminated by dirt etc.
- Observe rules for cleanliness => Page 129 .
- Remove noise insulation tray.

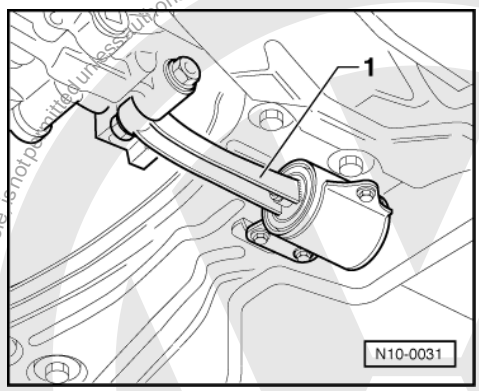

- -> Remove pendulum support.
- Separate front exhaust pipe from exhaust manifold => Page 151 , exhaust manifold, front exhaust pipe and catalyst with attachments.
- Disconnect cable selector mechanism from gearbox.

=> 5-speed manual gearbox 085; Repair group 34; Servicing selector mechanism (cable selector mechanism); Removing and installing selector mechanism Servicing selector mechanism (cable selector mechanism) Removing and installing selector mechanism

- Remove power assisted steering vane pump and lay to side; hoses remain connected.

=> Running gear; Repair group 48; Assembly overview: vane pump, reservoir, hydraulic lines; Removing and installing power steering vane pump. Assembly overview: vane pump, reservoir, hydraulic lines Removing and installing power steering vane pump.

- Remove left and right-hand drive shaft on gearbox and tie up:

=> Running gear, Axles, Steering; Repair group 40; Servicing front suspension; Removing and installing drive shafts Servicing front suspension Removing and installing drive shafts

- Open and close the expansion tank sealing cap to release pressure in cooling system.
- Drain coolant => Page 115 .
- Pull off coolant hose at engine with assembly tool for spring-type clamps VAS 5024.
- Removing lock carrier with attachments:

Protected by copyright. Copying for private or commercial purposes, in part or in whole, is not permitted unless authorised by Volkswagen AG. Volkswagen AG does not guarantee or accept any liability with respect to the correctness of information in this document. Copyright by Volkswagen AG.
satelettronica

=> General body repairs, Exterior; Repair group 50; Body, front; Removing and installing lock carrier with attachments. Body, front Removing and installing lock carrier with attachments.

- Tie-up power assisted steering reservoir.

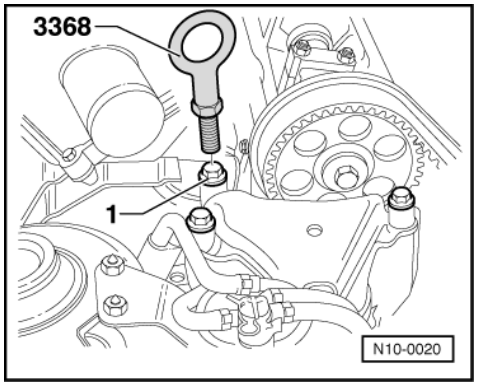

- Pull vacuum and breather hoses off engine.
- -> Remove engine mounting bolt -1- and fit ring bolt 3368.

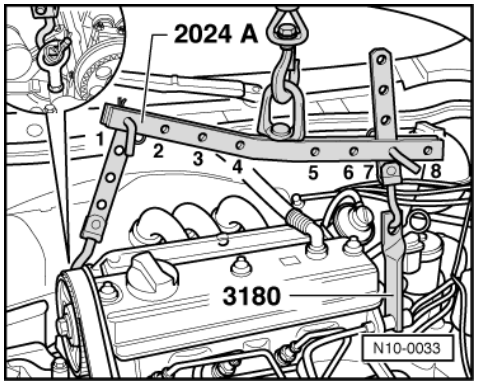

- -> Attach lifting tackle 2024 A with bracket 3180 as follows and lift slightly with workshop crane:

  Pulley end:
  4nd hole in hook rail at position 1

  Flywheel end:
  1st hole in hook at position 7

Warning! The hooks and locating pins must be secured with locking pins.

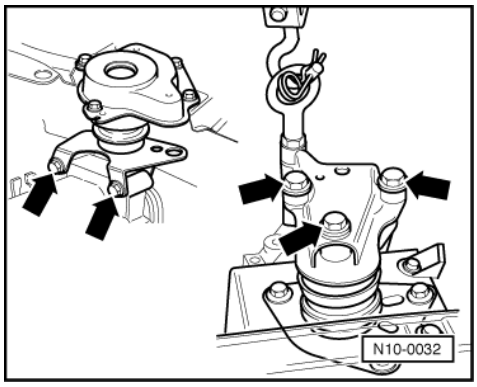

Notes:

- The positions marked 1...4 on the bar must be towards the pulley end.

satelettronica
Protected by copyright. Copying for private or commercial purposes, in part or in whole, is not permitted unless authorised by Volkswagen AG. Volkswagen AG does not guarantee or accept any liability with respect to the correctness of information in this document. Copyright by Volkswagen AG.

- The holes in the hook rails are counted up from the hook.

- -> Unbolt assembly at gearbox and engine mountings -arrows-.
- Lower assembly until it is released from the gearbox mounting.
- Pull assembly out forwards. When doing this, if necessary turn assembly and lower slightly.

Note:

When the assembly is lifted off, it must be carefully guided to prevent damage to the bodywork.

1.3 - Securing engine to assembly stand

When working on the engine, it should be secured to the assembly stand support clamp VW 313 using the engine and gearbox box support VW 540.

Work sequence

- Remove gearbox.
- Secure engine to support clamp VW 313 using engine and gearbox support VW 540.

1.4 - Notes on installing

Installation is carried out in the reverse order, when doing this note the following:

- Check clutch release bearing for wear and renew if necessary.

=> 5-speed manual gearbox 085; Repair group 30; Servicing clutch control; Servicing clutch release mechanism Servicing clutch control Servicing clutch release mechanism

- Lightly grease clutch release bearing, release bearing guide sleeve and splines on input shaft with G 000 100.
- Check whether the dowel sleeves for centralising engine/gearbox are in the cylinder block, install if necessary.
- When swinging the assembly in, ensure that clearance exists between the drive shafts.
- Align engine mountings stress-free by rocking, if necessary loosen engine mountings to body.

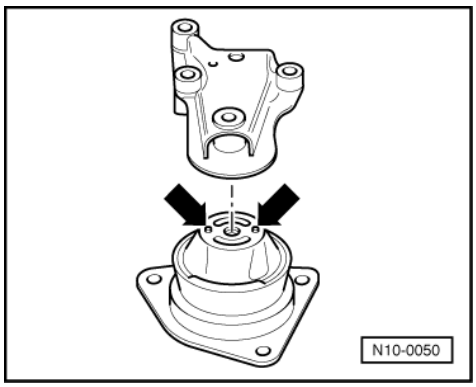

- -> When installing the engine mounting ensure that the pins on the bonded rubber mounting engage in the engine mounting -arrows-.

Note:

Assembly mounting tightening torques

satelettronica

=> Page 9 .

- Renew pointed bolt for securing shift finger (clean threads in shift finger).
- Install gear selector mechanism:

=> 5-speed manual gearbox 085; Repair group 34; Servicing selector mechanism (cable selector mechanism); Removing and installing selector mechanism Servicing selector mechanism (cable selector mechanism) Removing and installing selector mechanism

- Installing P.A.S. vane pump:

=> Running gear; Repair group 48; Assembly overview: vane pump, reservoir, hydraulic lines; Removing and installing power steering vane pump. Assembly overview: vane pump, reservoir, hydraulic lines Removing and installing power steering vane pump.

- Installing clutch cable:

=> 5-speed manual gearbox 085; Repair group 30; Servicing clutch mechanism. Servicing clutch mechanism.

- Installing lock carrier with attachments:

=> General body repairs, Exterior; Repair group 50; Body, front; Removing and installing lock carrier with attachments. Body, front Removing and installing lock carrier with attachments.

- Electrical connections and routing:

=> Electrical system; Repair group 97

- Install front exhaust pipe => Page 151 , Exhaust manifold, front exhaust pipe and catalyst with attachments.

Engine code AEF

- Adjust throttle cable => Page 131 , Servicing accelerator mechanism.

Continued for all engine codes

- Fill with coolant => Page 115
- Carry out a test drive and interrogate fault memory:

=> Repair group 01; Self-diagnosis; Interrogating fault memory Self-diagnosis Interrogating fault memory

1.5 - Tightening torques

Bolted connections		Torque
Bolts, nuts	M 6	10 Nm
	M 7	15 Nm
	M 8	20 Nm
	M10	40 Nm
	M 12	60 Nm
Deviating from above		
Engine to gearbox connecting bolts	M10	60 Nm
Engine to gearbox connecting bolts	M12	80 Nm
Drive shafts to flanged shafts		45 Nm
Exhaust pipe to manifold		40 Nm
Shift finger to selector rod		20 Nm

Protected by copyright. Copying for private or commercial purposes, in part or in whole, is not permitted unless authorised by Volkswagen AG. Volkswagen AG does not guarantee or accept any liability with respect to the correctness of information in this document. Copyright by Volkswagen AG.
satelettronica

Note:
Assembly mounting tightening torques
=> Page 9 .

Protected by copyright. Copyright by Volkswagen AG. Volkswagen AG does not guarantee or accept any liability with respect to the correctness of information in this document. Copyright by Volkswagen AG. Protected by copyright. Copyright or any use for commercial purposes, in part or in whole, is not permitted unless authorised by Volkswagen AG.

1.6 - Assembly mountings

Tightening torques
(Bolts oiled)

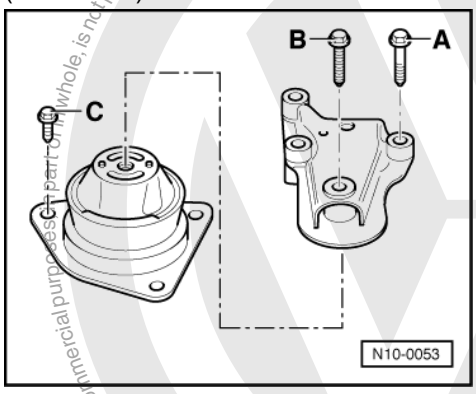

Note:
Stretch bolts must not be used again.
-> Engine mounting
A = 40 Nm + 1/4 turn (90 °) further
B = 50 Nm
C = 20 Nm + 1/8 turn (45 °) further

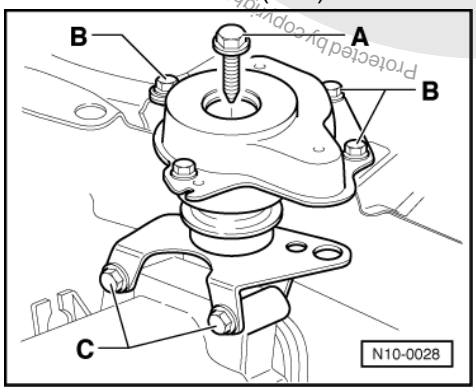

-> Gearbox mounting
A = 60 Nm + 1/4 turn (90 °) further
B = 20 Nm + 1/8 turn (45 °) further
C = 50 Nm

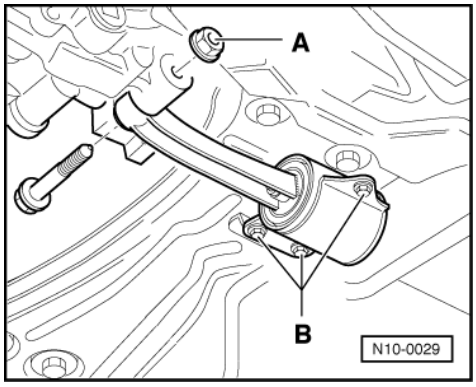

satelettronica

-> Pendulum support

Bolted connections	Torque
Pendulum support to gearbox -A-	50 Nm1)
Pendulum support to assembly mounting-B-	30 Nm 20 Nm + 1/4 turn (90 °) further2)

1) Tighten on nut (for tightening torque). Counter-hold on bolt head so that no stress is created in rubber bush.

2) 12.96 ‣ Stretch bolts M8 x 22; strength class 9.1.

Protected by copyright. Copying for private or commercial purposes, in part or in whole, is not permitted unless authorised by Volkswagen AG. Volkswagen AG does not guarantee or accept any liability with respect to the correctness of information in this document. Copyright by Volkswagen AG.

satelettronica

13 - Crankshaft group

1 - Dismantling and assembling engine

1.1 - Dismantling and assembling engine

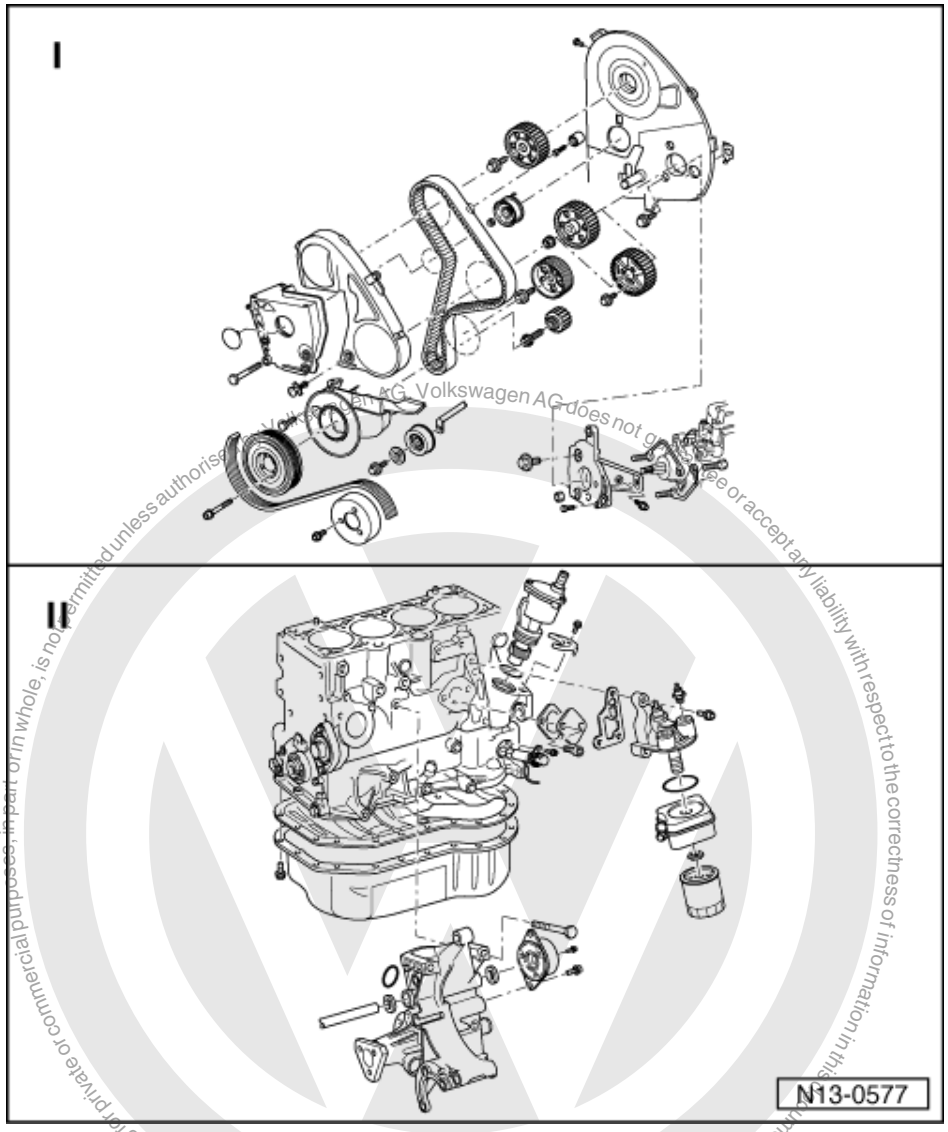

Notes:

- When the engine is stripped and assembled, it should be secured to the assembly stand with engine and gearbox support VW 540.
- If during repair work, metal shavings or larger quantities of small metal particles are found in the engine oil - caused, for example, by partial seizure of the crankshaft and conrod bearings - then, in addition to thoroughly cleaning out the oil passages, it is necessary to renew the oil cooler.
- Defective injectors can cause violent knocking noises in the engine which sound like defective bearings. When this occurs, run engine at idling speed and slacken off injector pipe unions one after the other. If knocking stops when a union is loosened, this indicates that the injector concerned is defective.

satelettronica

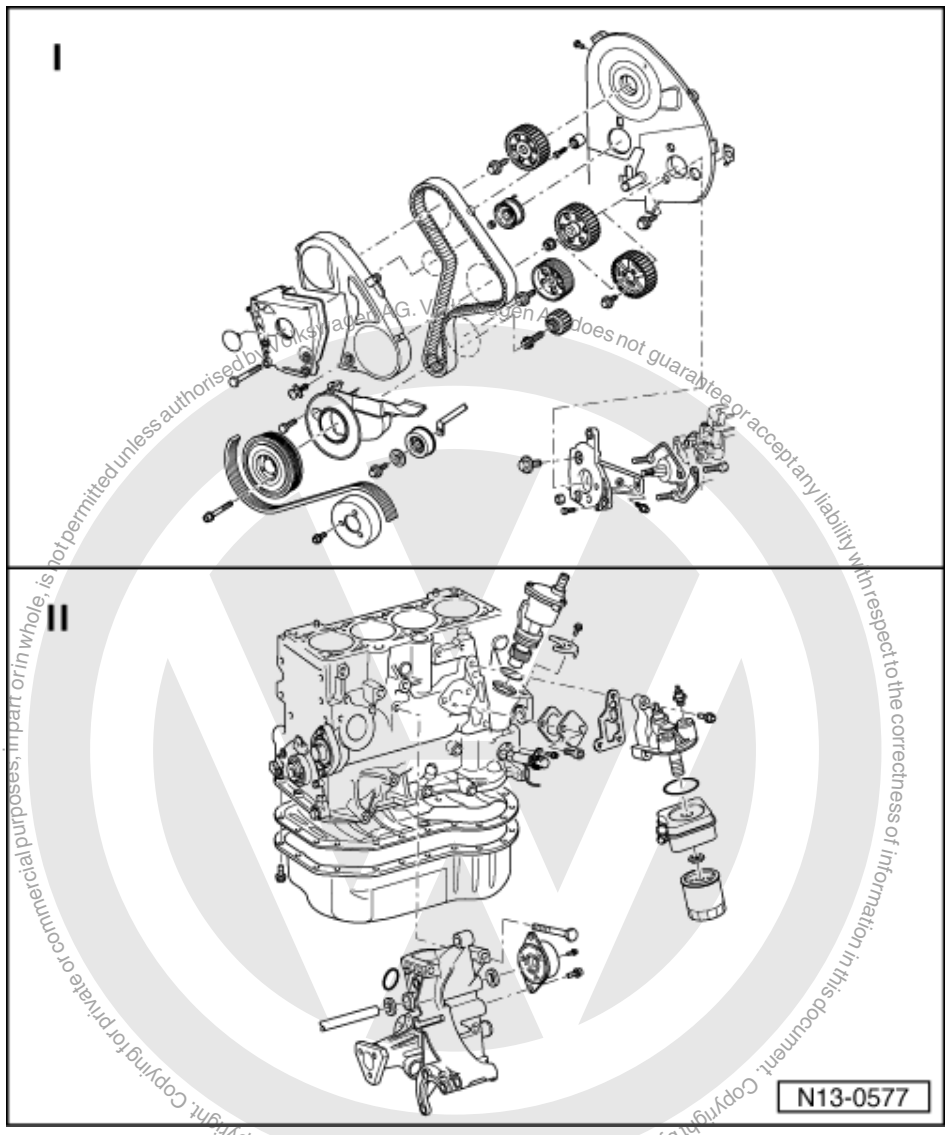

Protected by copyright. Copying for private or commercial purposes, in part or in whole, is not permitted unless authorised by Volkswagen AG. Volkswagen AG does not guarantee or accept any liability with respect to the correctness of information in this document. Copyright by Volkswagen AG.

Servicing injectors:

Engine code AEF

=> Repair group 23; Servicing fuel injection system; Servicing injectors Servicing fuel injection system Servicing injectors

‣ 09.99 (Engine codes AGD, AHG, AKU):

=> Repair group 23; Servicing diesel direct injection system; Servicing injectors Servicing diesel direct injection system Servicing injectors

Servicing injectors:

10.99 ‣(Engine codes AGD, AKU, ASX):

=> Repair group 23; Servicing diesel direct injection system; Servicing injectors Servicing diesel direct injection system Servicing injectors

I =>Page 13

II =>Page 19

satelettronica

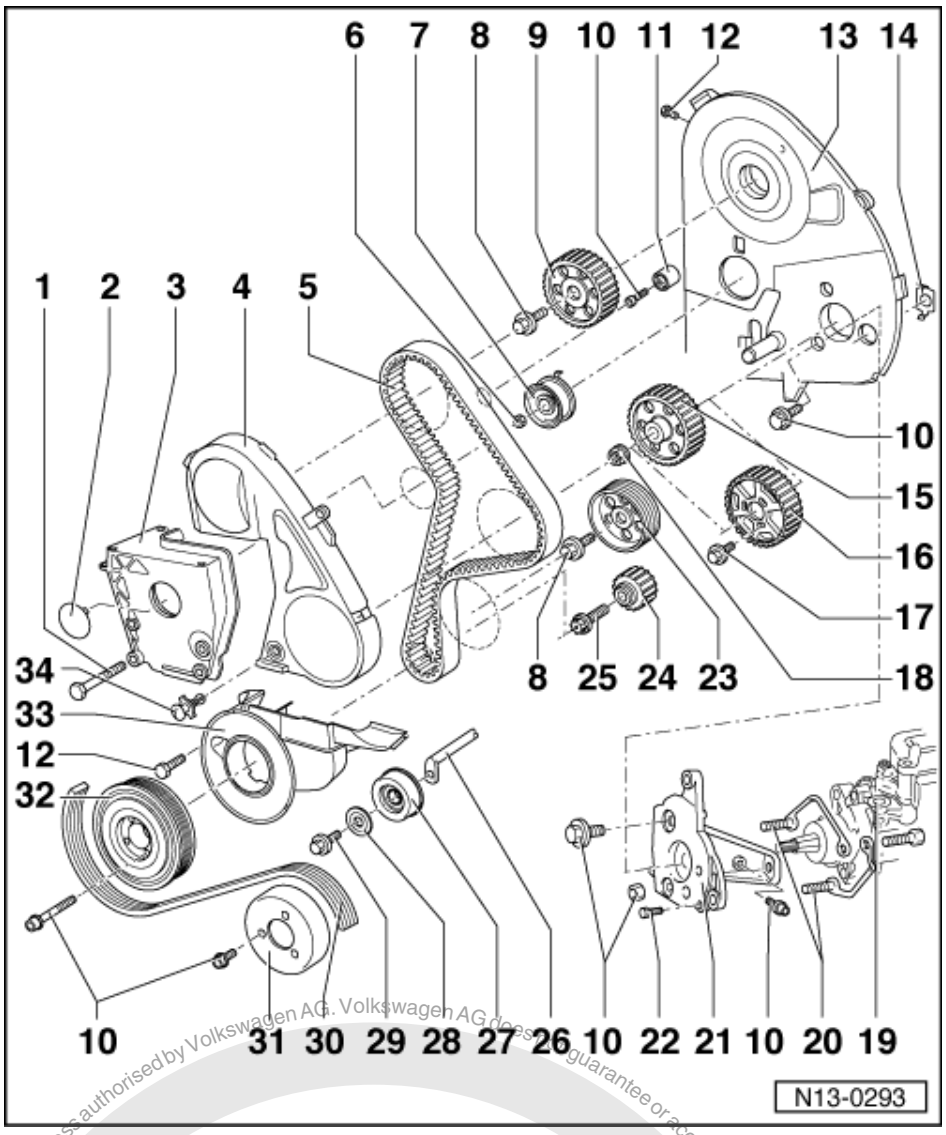

Part I

1 45 Nm
2 Cover cap
3 Engine bracket
4 Toothed belt guard - upper part
5 Toothed belt
- Mark D.O.R. before removing
- Check for wear
- Do not kink
- Removing, installing and tensioning
  => Page 57

6 20 Nm
7 Tensioning roller
- Checking semi-automatic toothed belt tensioning roller => Page 24
- Tensioning toothed belt
  => Page 57 , Removing, installing and tensioning toothed belt

Protected by copyright. Copying for private or commercial purposes, in part or in whole, is not permitted unless authorised by Volkswagen AG. Volkswagen AG does not guarantee or accept any liability with respect to the correctness of information in this document. Copyright by Volkswagen AG.
satelettronica

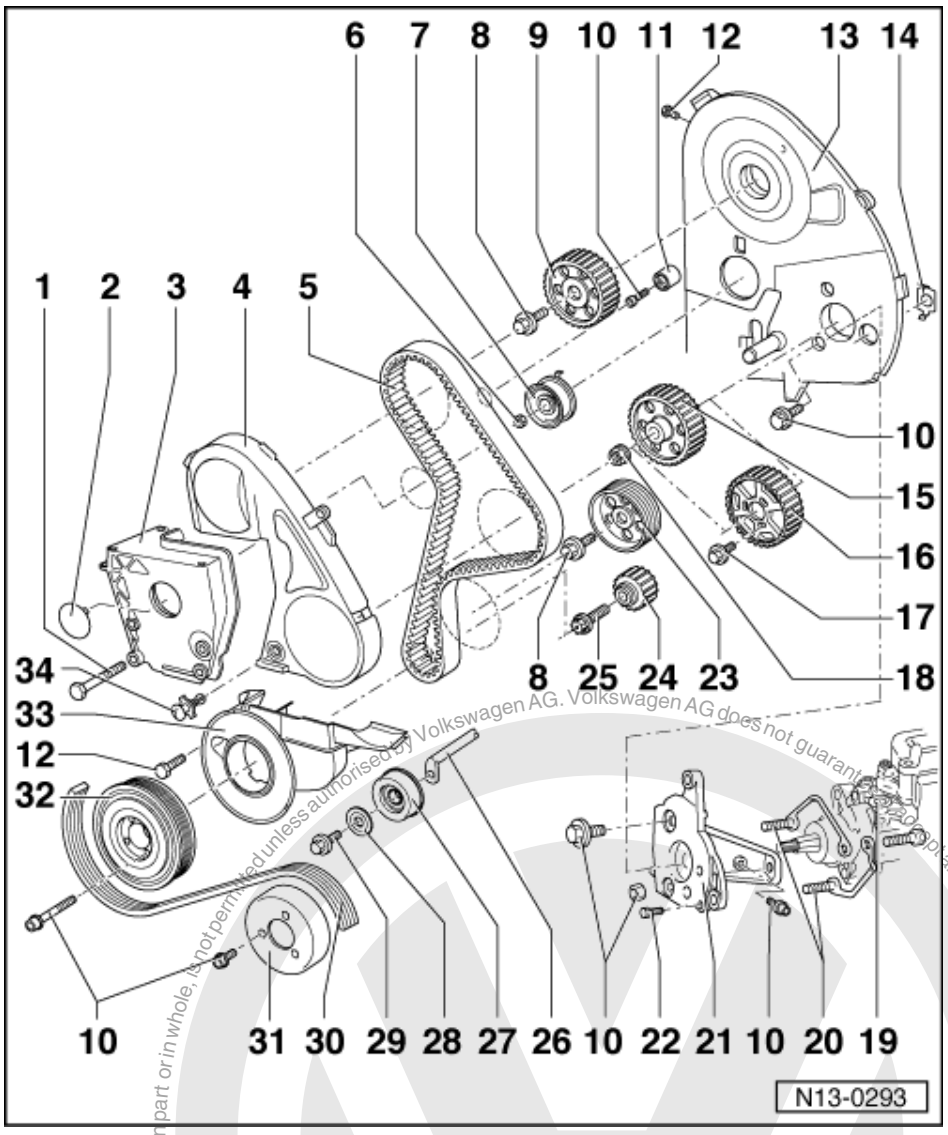

8 45 Nm

9 Camshaft sprocket

- Drive from camshaft taper using hammer and drift through hole in rear toothed belt guard => Page 57 , Removing, installing and tensioning toothed belt

10 25 Nm

- Renew belt pulley/vibration damper bolts and tighten to 10 Nm + 1/4 turn (90 °) further

11 Idler wheel

- Only engine codes AGD, AHG, AKU, ASX

12 10 Nm

13 Rear toothed belt guard

14 Clip

- Check securely seated

Protected by copyright. Copying for private or commercial purposes, in part or in whole, is not permitted unless authorised by Volkswagen AG. Volkswagen AG does not guarantee or assume any liability with respect to the correctness of information in this document. Copyright by Volkswagen AG.
satelettronica

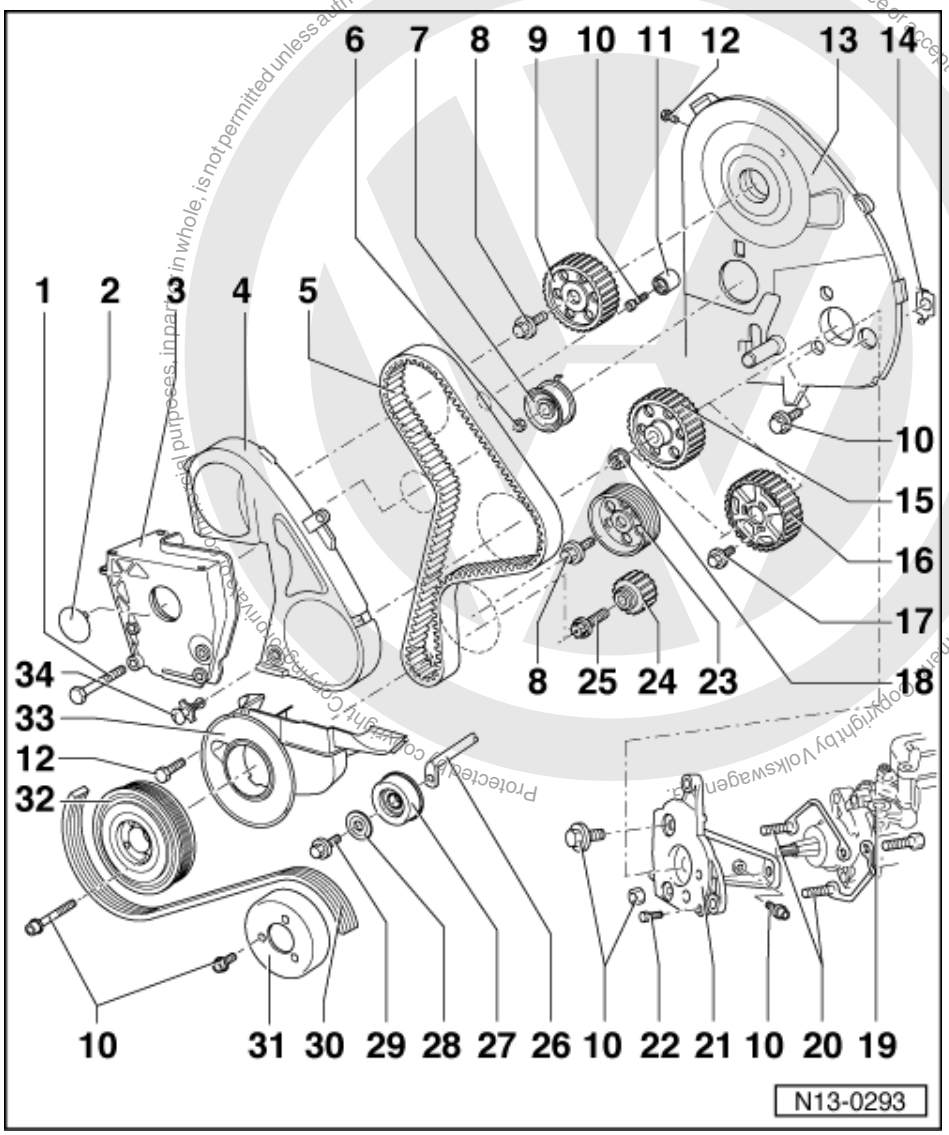

15 Injection pump sprocket
- Engine codes AGD, AHG, AKU, ASX
- Single part
- Removing =>Page 25

16 Injection pump sprocket
- Engine code AEF
- Two part

17 25 Nm
- Engine code AEF

18 55 Nm
- Engine codes AGD, AHG, AKU, ASX

19 Injection pump
- Removing and installing for engine code AEF:

=> Repair group 23; Servicing fuel injection system; Removing and installing injection pump Servicing fuel injection system Removing and installing injection pump

- Removing and installing for engine codes AGD, AHG, AKU, ASX:

=> Repair group 23; Servicing diesel direct injection system; Removing and installing injection pump Servicing diesel direct injection system Removing and installing injection pump

satelettronica

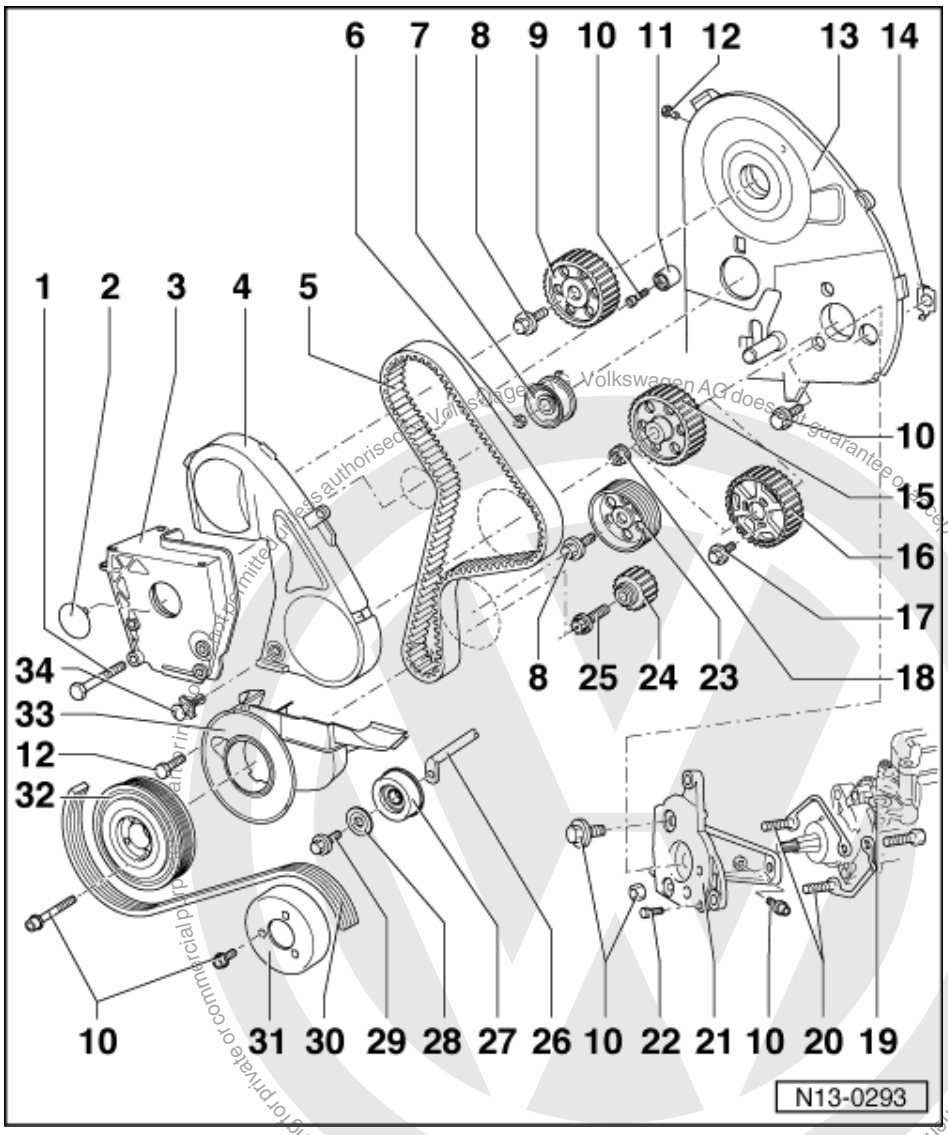

20 Bracket
- Only engine codes AGD, AHG, AKU, ASX

21 Console

22 25 Nm
- Only tighten when injection pump is bolted tightly to the console

23 Intermediate shaft sprocket

24 Crankshaft toothed belt sprocket

25 90 Nm + 1/4 turn (90 °) further
- Counter-hold with 3099 to loosen and tighten
- Renew
- Threads and shoulder must be free of oil and grease
- The quarter turn further can be done in several stages.

Volkswagen AG does not guarantee or accept any liability with respect to the correctness of information in this document. Copyright by Volkswagen AG.
Protected by copyright. Copying for private or commercial purposes, in part or in whole, is not permitted unless authorised by Volkswagen AG.
satelettronica

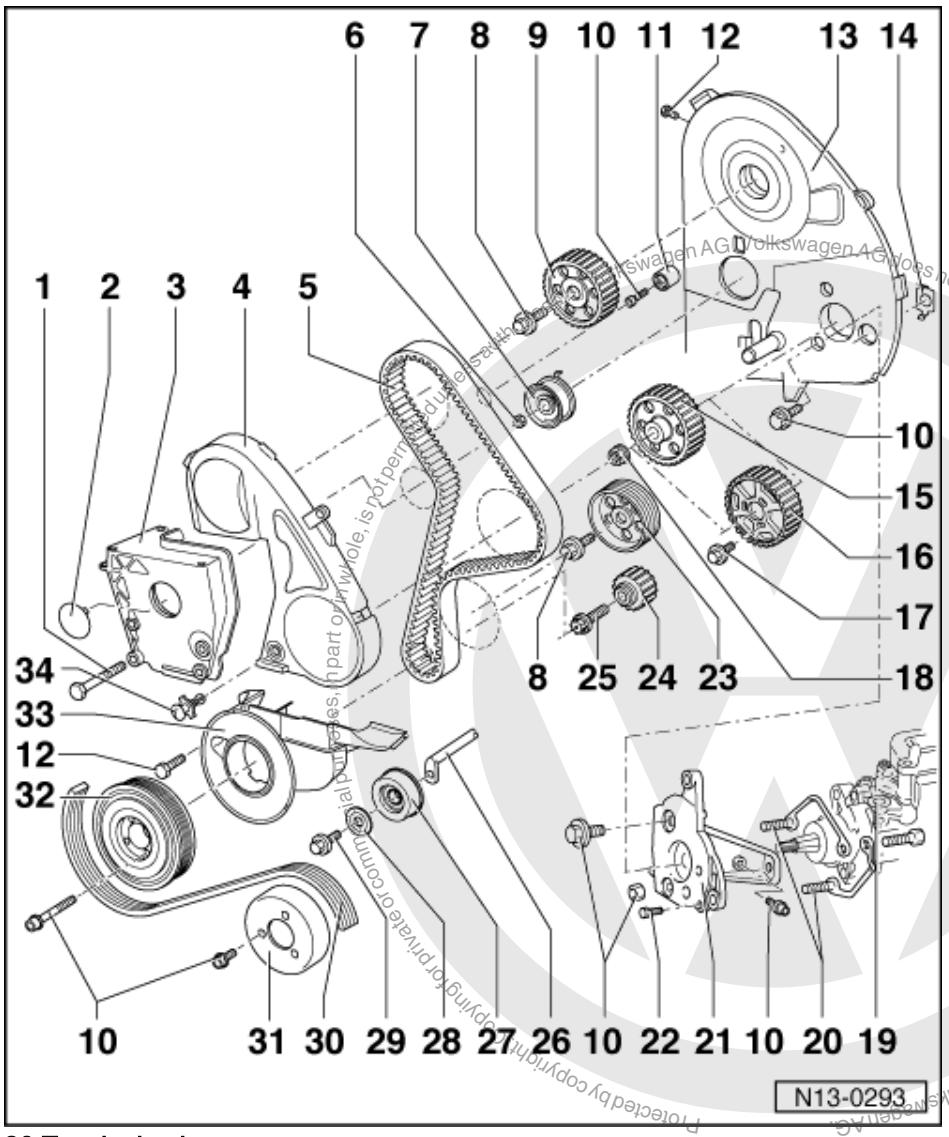

26 Tensioning lever
- Grease with G 000 100

27 Tensioner

28 Washer

29 20 Nm
- Left-hand thread

30 Ribbed belt
- Mark direction of rotation before removing
- Check for wear
- Do not kink
- Removing and installing
  => Page 23

31 Pulley
- For coolant pump
- Removing and installing coolant pump and compact bracket => Page 112

Protected by copyright. Copyright by Volkswagen AG. Volkswagen AG does not guarantee or accept any liability with respect to the correctness of information in this document. Copying for private or commercial purposes, in part or in whole, is not permitted unless authorized by Volkswagen AG.
satelettronica

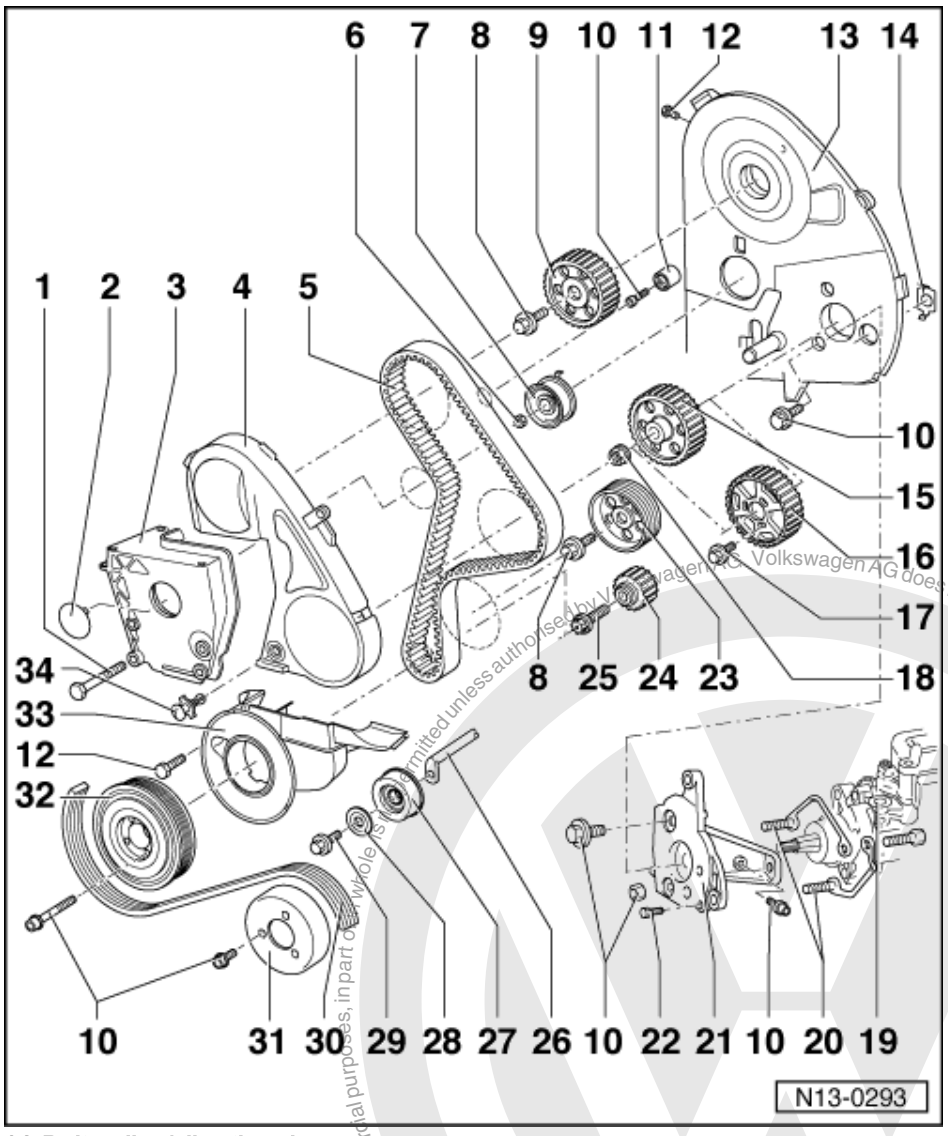

32 Belt pulley/vibration damper

- Can only be installed in one position. Holes are off-set

33 Toothed belt guard - lower part

34 Spreader clip

Protected by copyright. Copying for private or commercial purposes, in part or in whole, is not permitted unless authorised by Volkswagen AG. Volkswagen AG does not guarantee or accept any liability with respect to the correctness of information in this document. Copyright by Volkswagen AG.
satelettronica

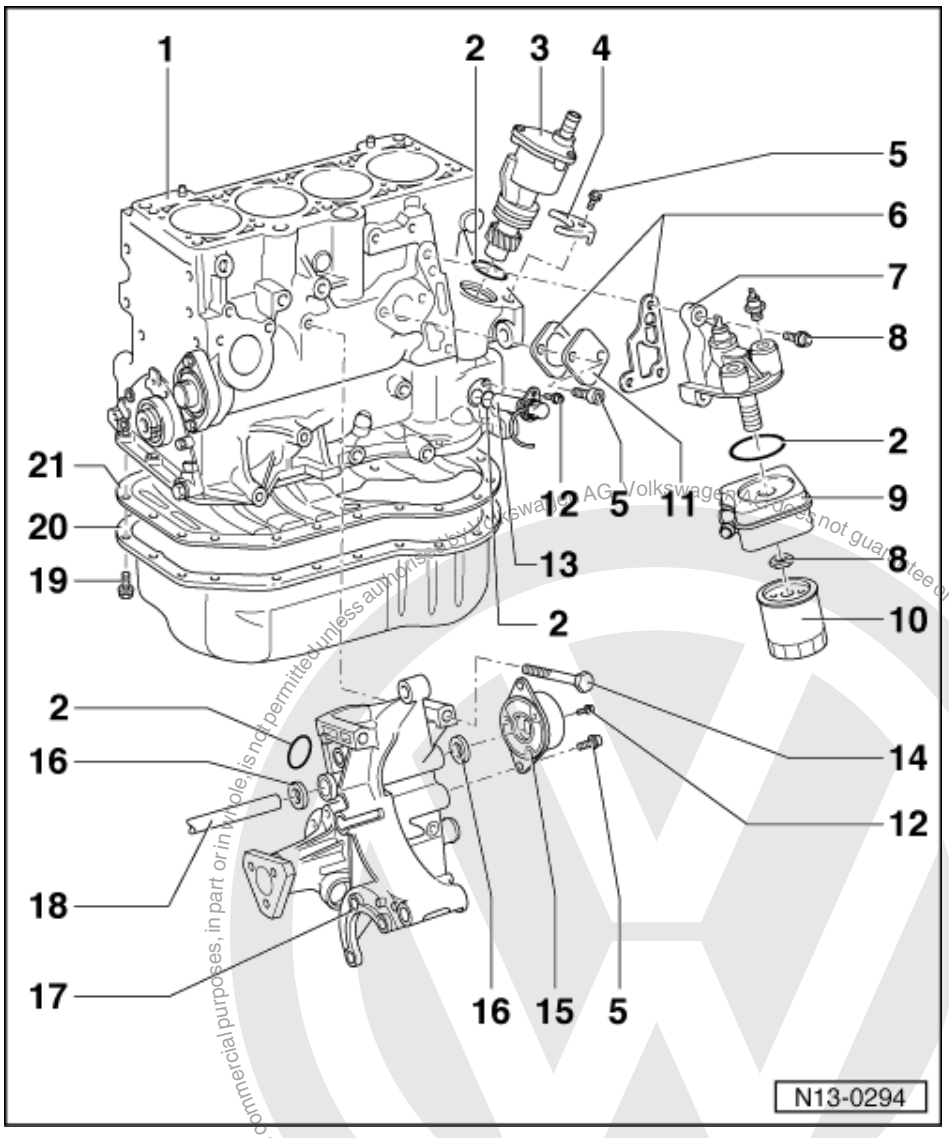

Part II

1 Cylinder block
- Removing and installing sealing flange and flywheel => Page 27
- Removing and installing crankshaft => Page 34
- Dismantling and assembling pistons and conrods => Page 38

2 O-ring
- Renew if damaged

3 Vacuum pump

4 Clamp

5 20 Nm

6 Gasket
- Renew

7 Oil filter bracket

satelettronica

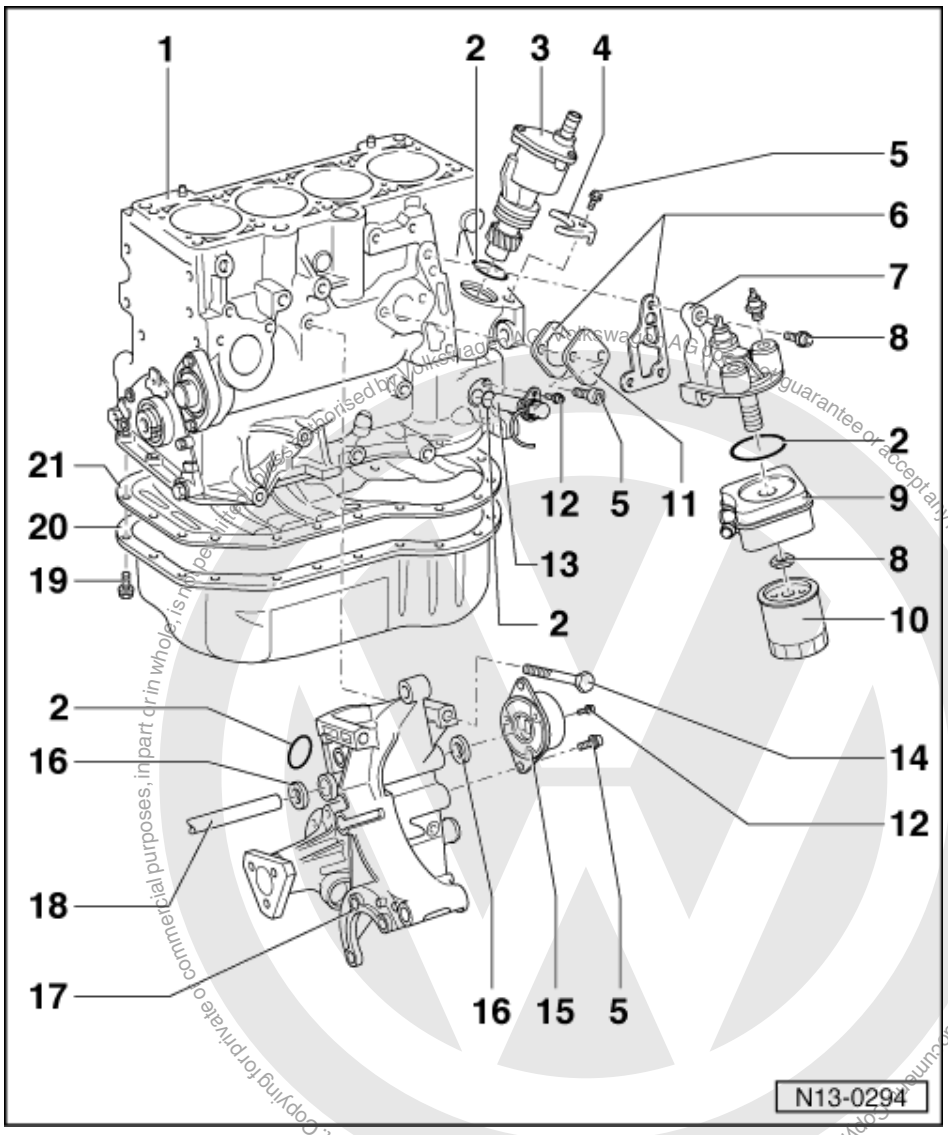

8 25 Nm

9 Oil cooler

- Engine codes AEF, AGD and ASX
- Coat surface contacting oil filter bracket outside the seal with AMV 188 100 02
- Ensure clearance to adjacent components
- See note
  => Page 11

10 Oil filter

- Loosen with strap wrench
- Tighten by hand
- Note instructions on filter when installing

11 Cap

12 10 Nm

satelettronica

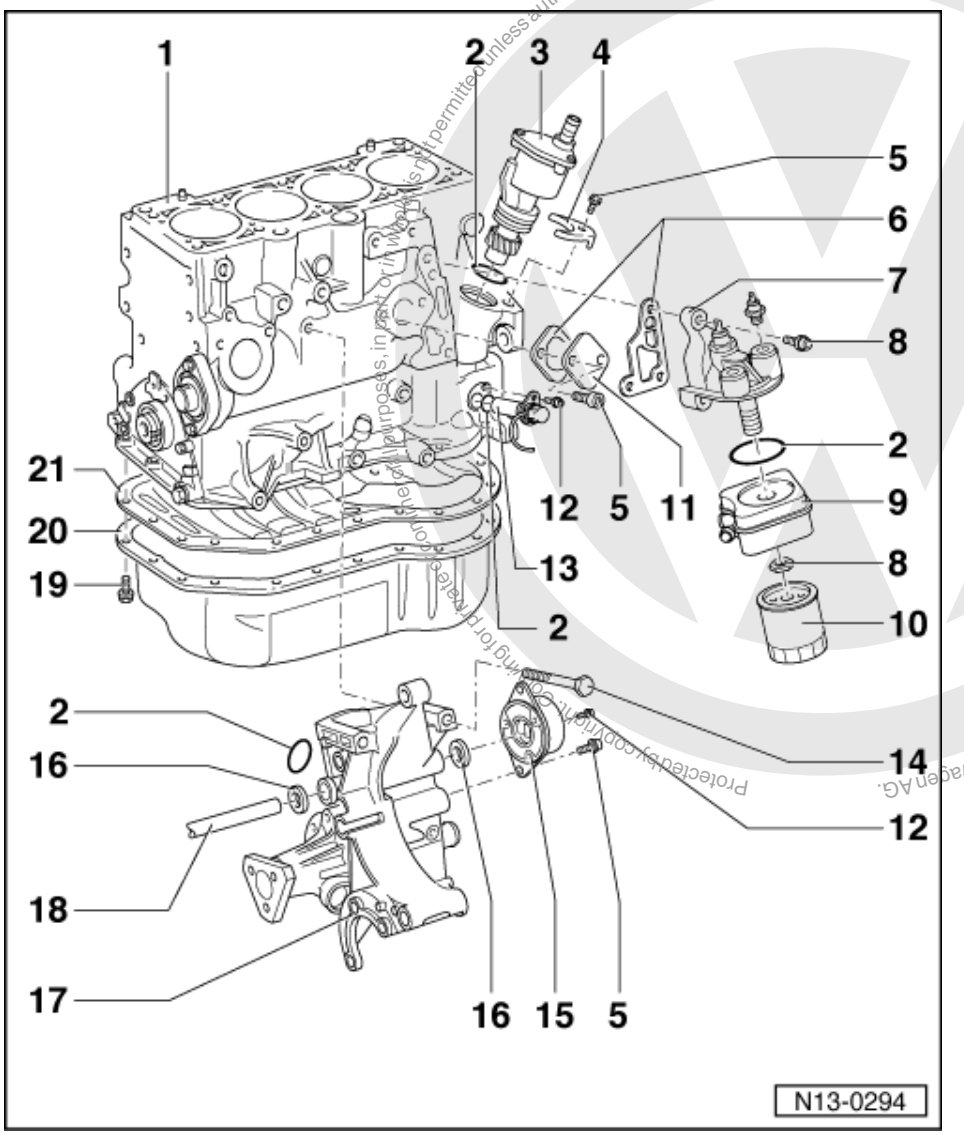

13 Engine speed sender (G28)

- Only engine codes AGD, AHG, AKU, ASX
- Checking:

=> Repair Group 01; Self-diagnosis; Interrogating fault memory Self-diagnosis Interrogating fault memory

14 25 Nm

- Note tightening sequence
  Page => 114 , Fig. 1

15 Tensioning element

16 Sealing ring

- Renew if damaged

17 Compact bracket

- For coolant pump, coolant thermostat, ribbed belt tensioning roller, alternator and P.A.S. vane pump
- Removing and installing
  => Page 112

Protected by copyright. Copying for private or commercial purposes, in part or in whole, is not permitted unless authorised by Volkswagen AG. Volkswagen AG does not guarantee or accept any liability with respect to the correctness of information in this document. Copyright by Volkswagen AG.
satelettronica

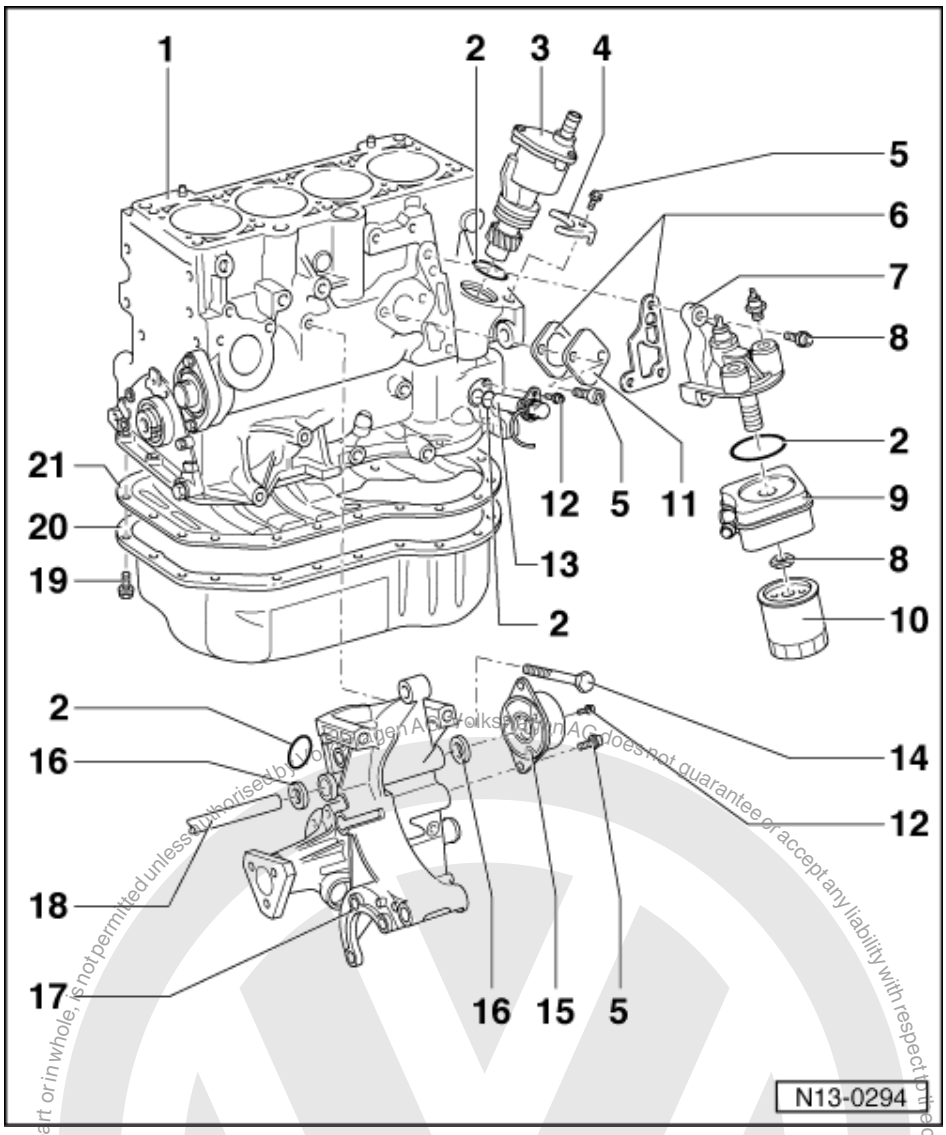

18 Tensioning lever
- Grease with G 000 100

19 20 Nm
- Remove and install both rear bolts gearbox end with jointed spanner 3185

20 Sump
- Clean sealing surface before installing

21 Baffle plate
- With gasket
- Renew gasket if damaged
- Before fitting gasket coat sump flange/cylinder block flange with "D2"
- Engine codes AGD, AHG, AKU, ASX only renew gasket

satelettronica

1.2 - Removing and installing ribbed belt

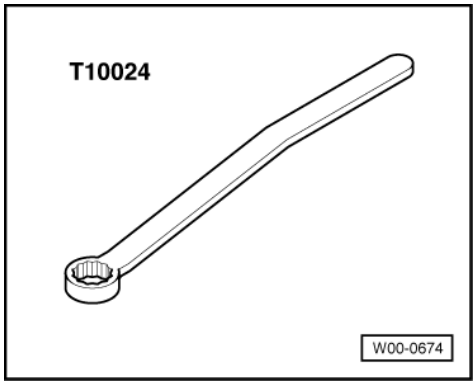

Special tools, workshop equipment, testers, measuring instruments and auxiliary items required

- Ring spanner SW 15 mm T10024

Work sequence

Note:

Before removing the ribbed belt mark the direction of rotation. When installing the belt ensure it is correctly seated in the pulley.

- Remove noise insulation tray.
- Mark ribbed belt direction of rotation.

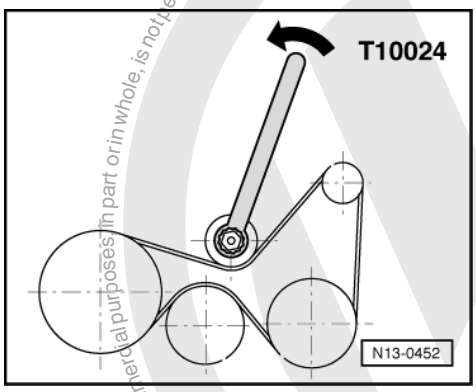

- -> Swivel tensioning roller with ring spanner T10024 in direction of arrow.
- Remove/fit ribbed belt.

Note:

When installing the ribbed V-belt, ensure the belt runs in the right direction and seats correctly on the belt pulleys.

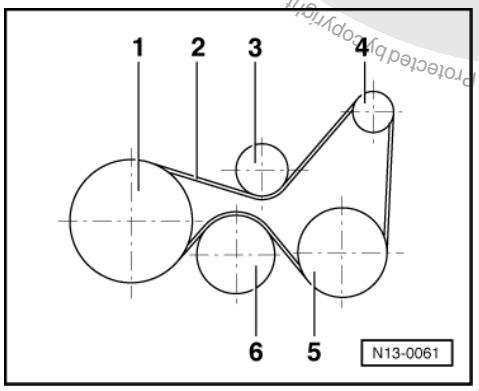

Protected by copyright. Copying for private or commercial purposes, in part or in whole, is not permitted unless authorised by Volkswagen AG. Volkswagen AG does not guarantee or accept any liability with respect to the correctness of information in this document. Copyright by Volkswagen AG.
satelettronica

After completing repairs always:

- Start engine and check belt running.

-> Ribbed belt routing

1 - Vibration damper/belt pulley
2 - Ribbed belt
3 - Tensioner
4 - Pulley - alternator
5 - Pulley - P.A.S. vane pump
6 - Pulley - coolant pump

1.3 - Checking semi-automatic toothed belt tensioning roller

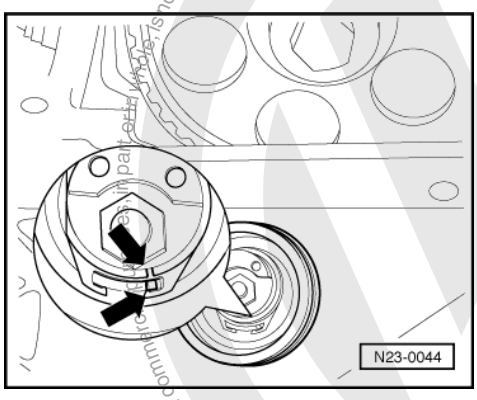

Test conditions

- Toothed belt installed and tensioned

Test sequence

- -> Tension toothed belt with firm thumb pressure.
  Notch and raised portion -arrows- must move apart.
- Release thumb pressure on toothed belt. The tensioning roller must move back to its initial position. (Notch and raised portion align again).
- If notch and raised portion do not align, loosen tensioning roller and adjust toothed belt tension =>Page 57 , Removing, installing and tensioning toothed belt.
- If the toothed belt tension is adjusted, check commencement of injection and adjust if necessary:

Engine code AEF:

=> Repair group 23; Servicing fuel injection system; Checking commencement of injection and adjusting if necessary Servicing fuel injection system Checking commencement of injection and adjusting if necessary

Engine codes AGD, AHG, AKU, ASX:

=> Repair group 23; Servicing diesel direct injection system; Dynamically checking and adjusting commencement of injection Servicing diesel direct injection system Dynamically checking and adjusting commencement of injection

Copyright by Volkswagen AG. Volkswagen AG does not guarantee or accept any liability with respect to the correctness of information in this document. Copyright by Volkswagen AG. Transmission or reproduction of this document or parts thereof is not permitted unless authorised by Volkswagen AG. Copyright. Copyright for private or commercial purposes, in whole or in part, is not permitted unless authorised by Volkswagen AG.
satelettronica

1.4 - Removing single part injection pump sprocket

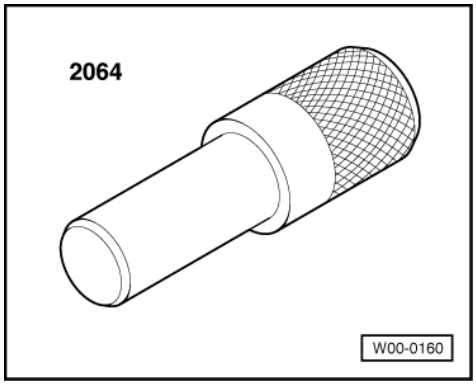

Special tools, workshop equipment, testers, measuring instruments and auxiliary items required

- 2064 Mandrel

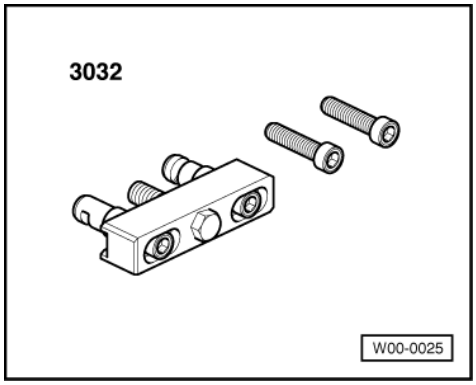

- 3032 Puller

Removing

- Toothed belt removed

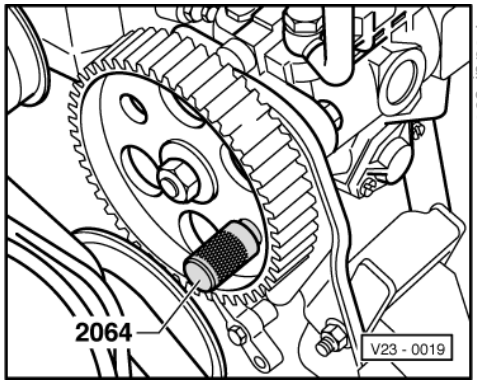

- -> Lock injection pump sprocket with mandrel 2064.
- Remove injection pump sprocket securing nut.

Protected by copyright. Copying for private or commercial purposes, in part or in whole, is not permitted unless authorised by Volkswagen AG. Volkswagen AG does not guarantee or accept any liability with respect to the correctness of information in this document. Copyright by Volkswagen AG.
Satelettronica

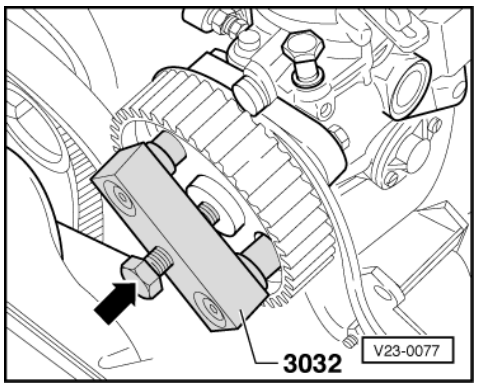

- -> Loosen puller arms and offer up.
- Locate puller arms through holes in injection pump sprocket and tighten.
- Place injection pump sprocket under tension with puller.
- Release injection pump sprocket from injection pump taper by tapping lightly on puller spindle -arrow- (when doing this hold sprocket so that it does not fall off).

Protected by copyright. Copying for private or commercial purposes, in part or in whole, is not permitted unless authorised by Volkswagen AG. Volkswagen AG does not guarantee or accept any liability with respect to the correctness of information in this document. Copyright by Volkswagen AG.

satelettronica

2 - Removing and installing sealing flange and flywheel

2.1 - Removing and installing sealing flange and flywheel

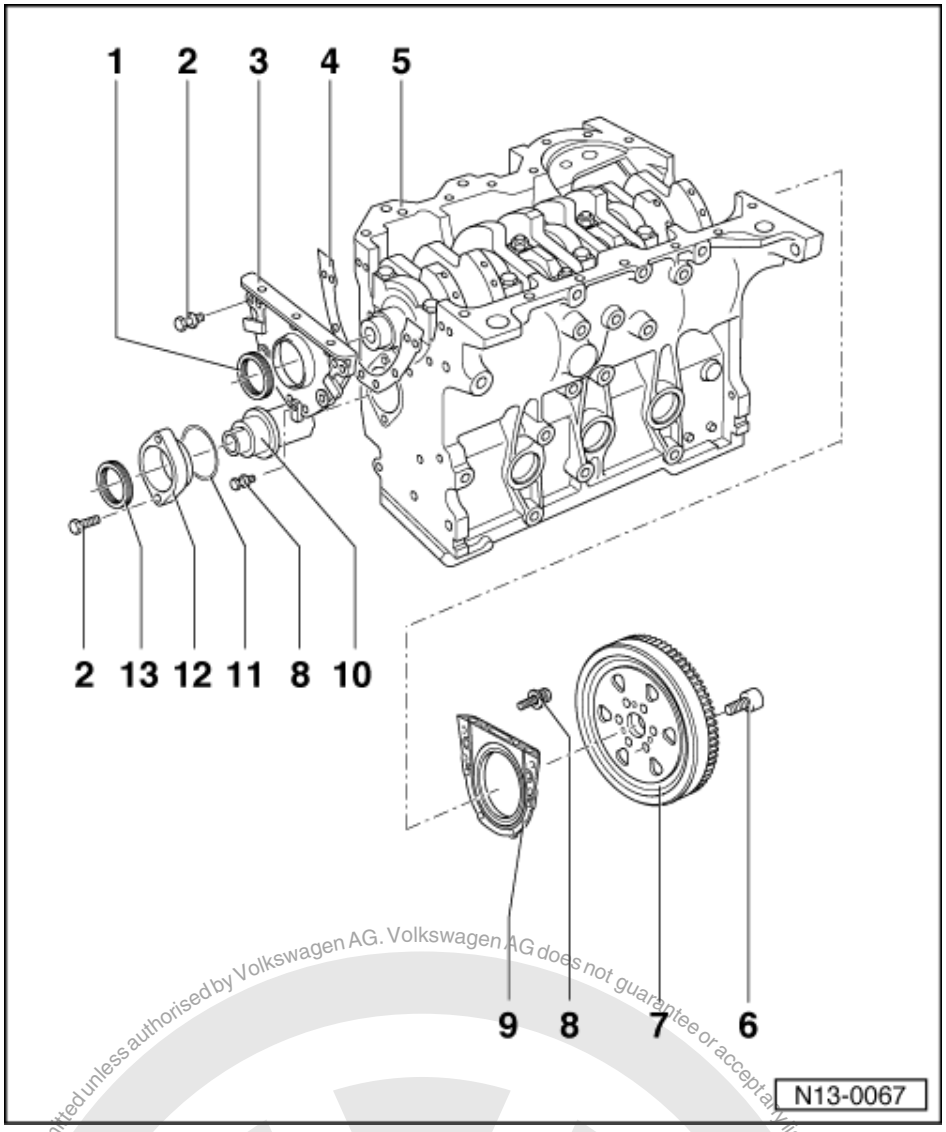

Note:

Servicing the clutch:

=> 5-Speed manual gearbox 085; Repair group 30; Servicing clutch Servicing clutch

1 Oil seal
- Renewing crankshaft oil seal - pulley end => Page 31

2 25 Nm
3 Sealing flange, front
4 Gasket
- Renew

satelettronica
Protected by copyright. Copying for private or commercial purposes, in part or in whole is not permitted unless authorised by Volkswagen AG. Volkswagen AG does not guarantee or accept any liability with respect to the correctness of information in this document. Copyright by Volkswagen AG.

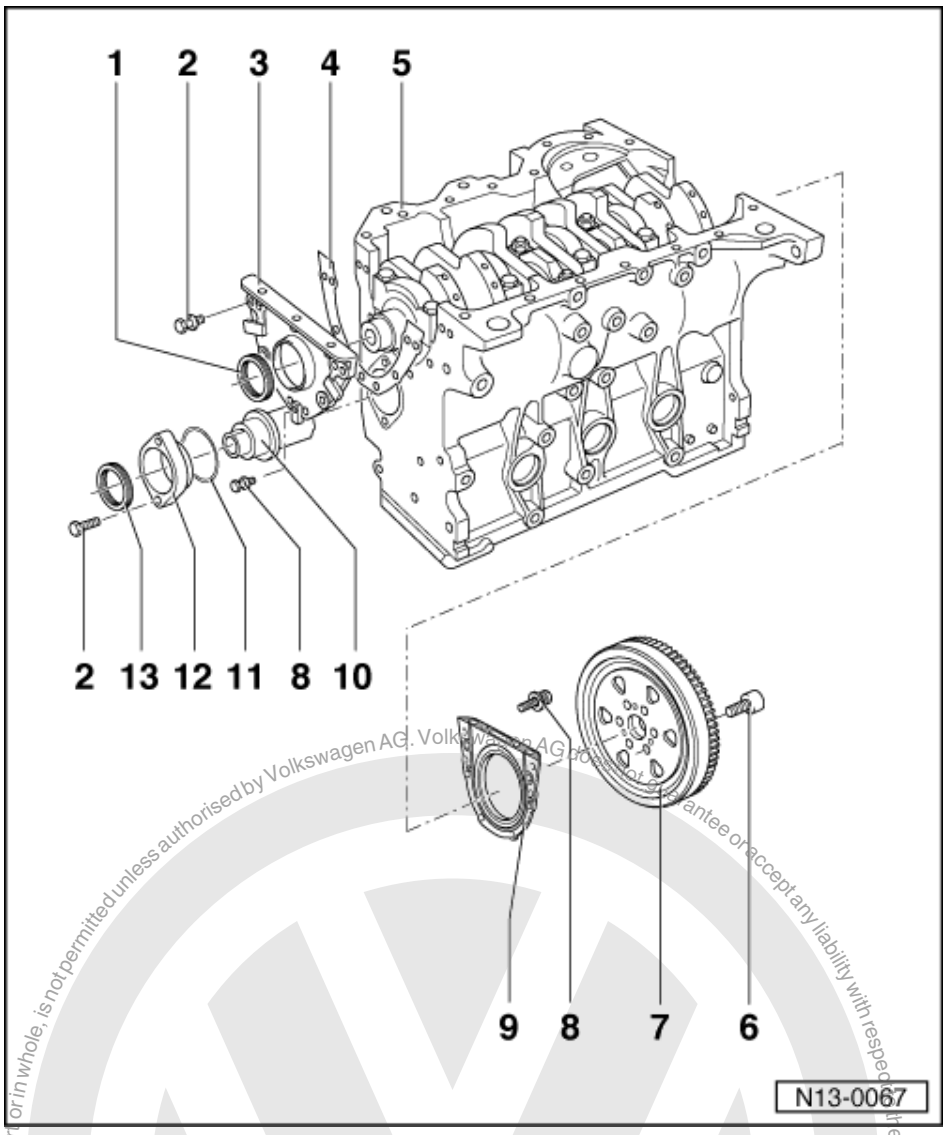

5 Cylinder block
- Removing and installing crankshaft => Page 34
- Dismantling and assembling pistons and conrods => Page 38

6 60 Nm + 1/4 turn (90 °) further
- Renew
- The quarter turn further can be done in several stages.

7 Flywheel
- To remove and install flywheel, counter-hold with retainer 3386
- Engine code AEF with twin-mass flywheel
- Engine codes AGD, AHG, AKU, ASX with single-mass flywheel

8 10 Nm

Protected by copyright. Copying for private or commercial purposes, in part or in whole, is not permitted unless authorised by Volkswagen AG. Volkswagen AG does not guarantee or accept any liability with respect to the correctness of information in this document. Copyright by Volkswagen AG.

satelettronica

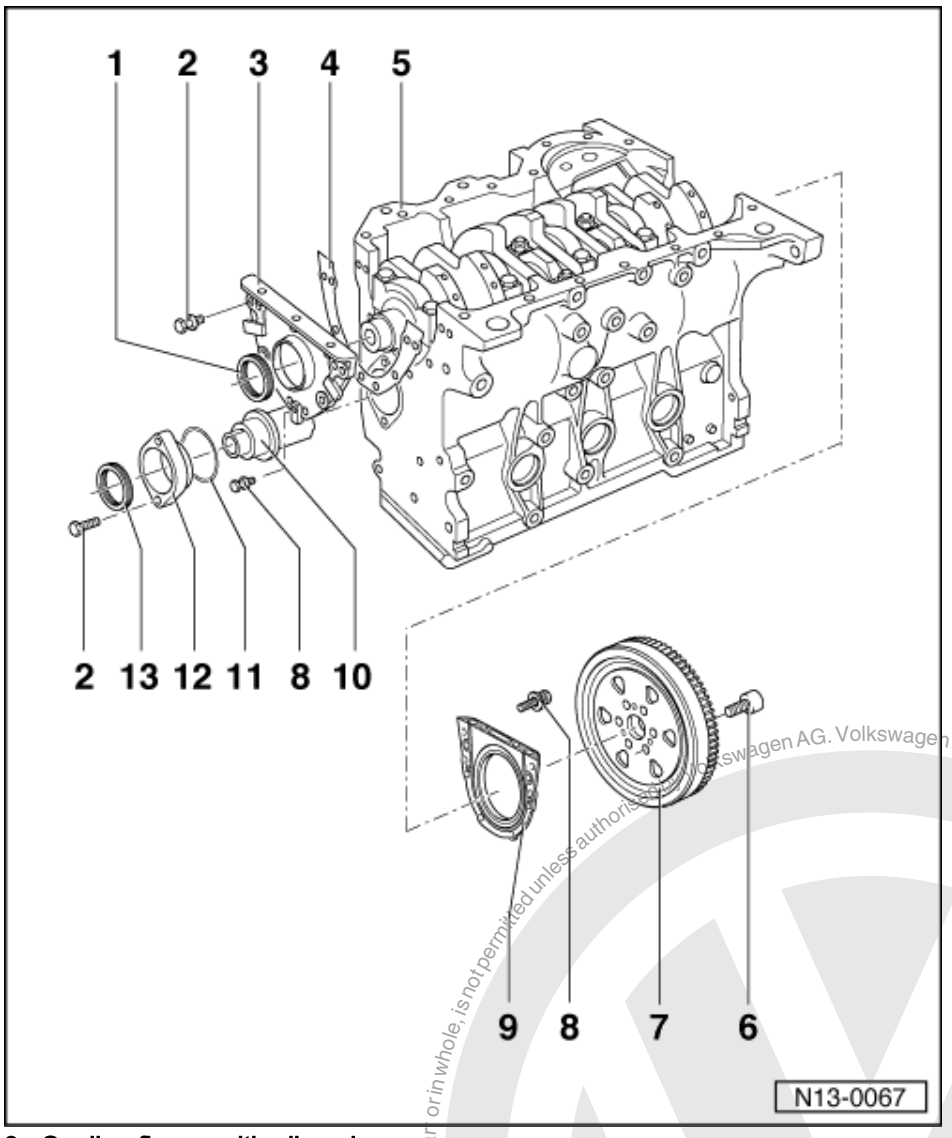

9 Sealing flange with oil seal
- Only renew complete
- Do not additionally oil or grease the oil seal sealing lip
- Before installing, remove oil remains from crankshaft journal with a clean cloth
- Use protective sleeve supplied when installing
- Remove protective sleeve first after sealing flange has been slid onto crankshaft journal

10 Intermediate shaft

11 O-ring
- Renew if damaged

12 Sealing flange intermediate shaft

Protected by copyright. Copying for private or commercial purposes, in part or in whole, is not permitted unless authorised by Volkswagen AG. Volkswagen AG does not guarantee or accept any liability with respect to the correctness of information in this document. Copyright by Volkswagen AG.
satelettronica

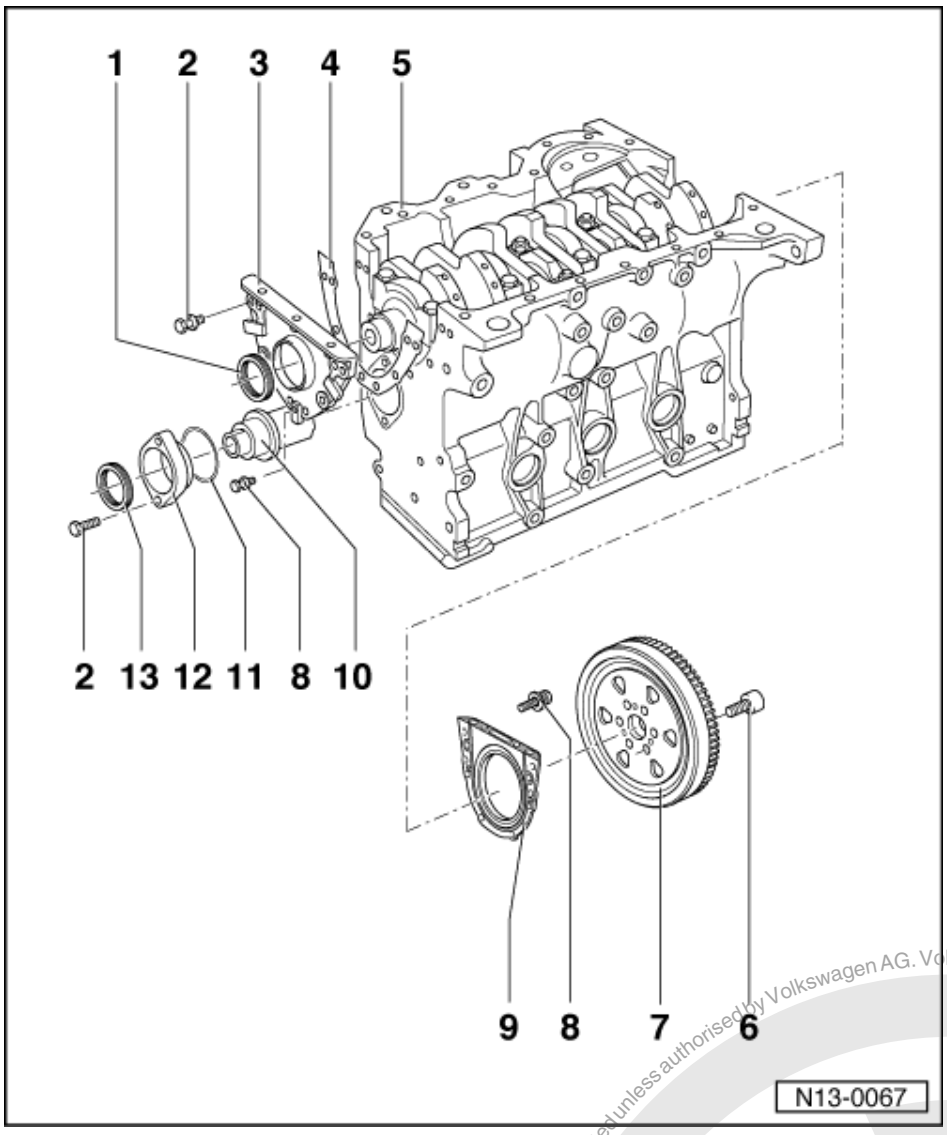

13 Oil seal

- To remove oil seal, remove sealing flange
- Install with fitting tool 10-203
- Lightly oil sealing lip

Protected by copyright. Copying for private or commercial purposes, in part or in whole, is not permitted unless authorised by Volkswagen AG. Volkswagen AG does not guarantee or accept any liability with respect to the correctness of information in this document. Copyright by Volkswagen AG.
satelettronica

2.2 - Renewing crankshaft oil seal -pulley end

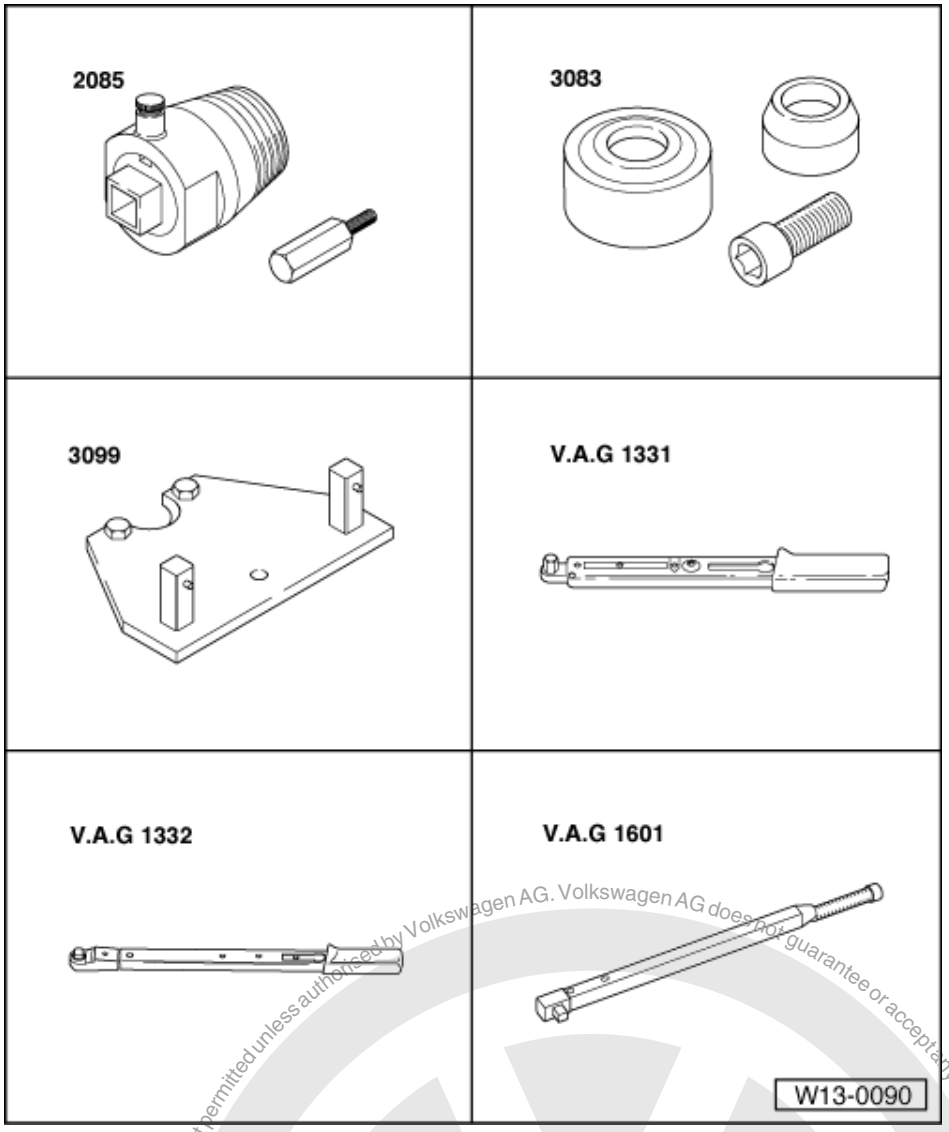

Special tools, workshop equipment, test and measuring appliances and auxiliary items required

- 2085 Oil seal extractor
- 3083 Oil seal fitting tool
- 3099 Counter-hold tool
- V.A.G 1331 Torque wrench (5...50 Nm)
- V.A.G 1332 Torque wrench (40...200 Nm)
- V.A.G 1601 Torque wrench (150...800 Nm)

Removing

- Remove ribbed belt => Page 23 .
- Remove toothed belt => Page 57 .

Protected by copyright. Copying for private or commercial purposes, in whole or in part, is not permitted unless authorised by Volkswagen AG. Volkswagen AG does not guarantee or accept any liability with respect to the correctness of information in this document. Copyright by Volkswagen AG.
satelettronica

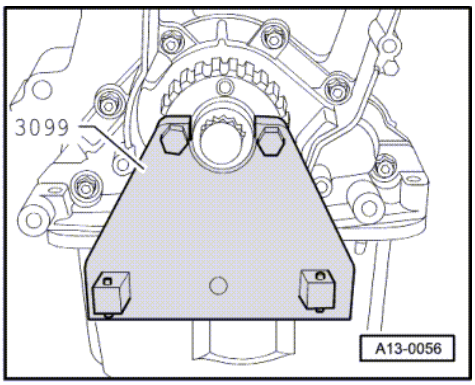

- -> Remove crankshaft toothed belt sprocket. To do this counter-hold sprocket with 3099.

Note:

When bolting on counter-hold, place, if necessary, two washers between toothed belt pulley and counter-hold.

- Remove crankshaft sprocket. To do this counter-hold sprocket with 3099.

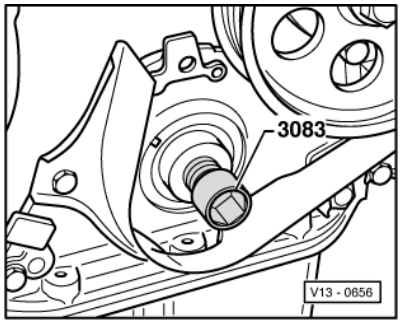

- -> To guide the oil seal extractor, screw socket head bolt from oil seal fitting tool 3083 into crankshaft as far as it will go.
- Unscrew inner part of the oil seal extractor 2085 two turns (approx. 3 mm) out of the outer part and lock with knurled screw.

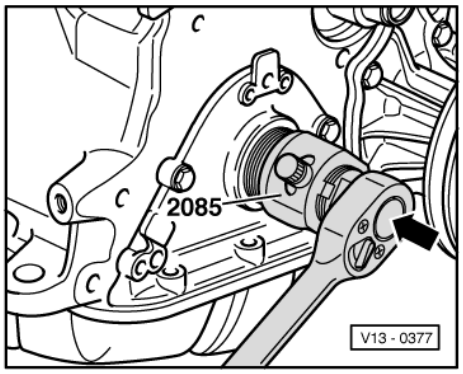

- -> Lubricate threaded head of oil seal extractor, place it in position and exerting firm pressure screw it as far as possible into oil seal.
- Loosen knurled screw and turn inner part against crankshaft until the oil seal is pulled out.

Installing

- Lightly oil sealing lip of oil seal.

Protected by copyright. Copying for private or commercial purposes, in part or in whole, is not permitted unless authorised by Volkswagen AG. Volkswagen AG does not guarantee or accept any liability with respect to the correctness of information in this document. Copyright by Volkswagen AG.
satelettronica

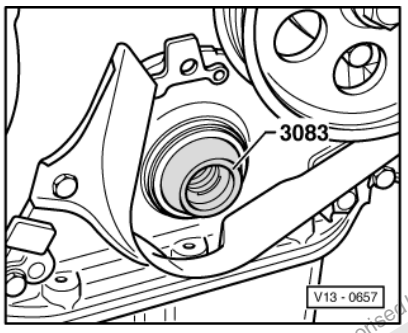

- -> Place guide sleeve from oil seal fitting tool 3083 onto crankshaft journal.
- Slide oil seal over guide sleeve.

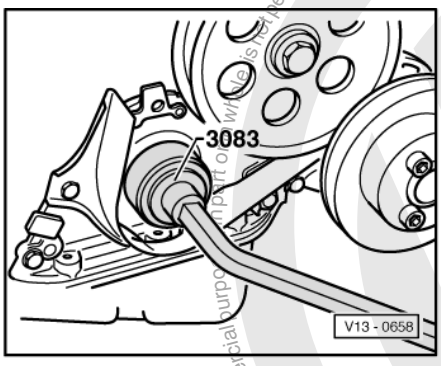

- -> Press in oil seal to stop using pressing sleeve from oil seal fitting tool 3083 and old securing bolt for crankshaft toothed belt pulley.
- Install crankshaft toothed belt pulley and lock with counter-hold 3099.
- Tighten new securing bolt to 90 Nm and then turn
  1/4 turn (90°)
  further.

Notes:

- Replace bolt for crankshaft toothed belt pulley.
- Tighten securing bolt with torque wrench V.A.G 1601.

- Install ribbed belt => Page 23 .
- Install and tension toothed belt => Page 57 .

satelettronica

3 - Removing and installing crankshaft

3.1 - Removing and installing crankshaft

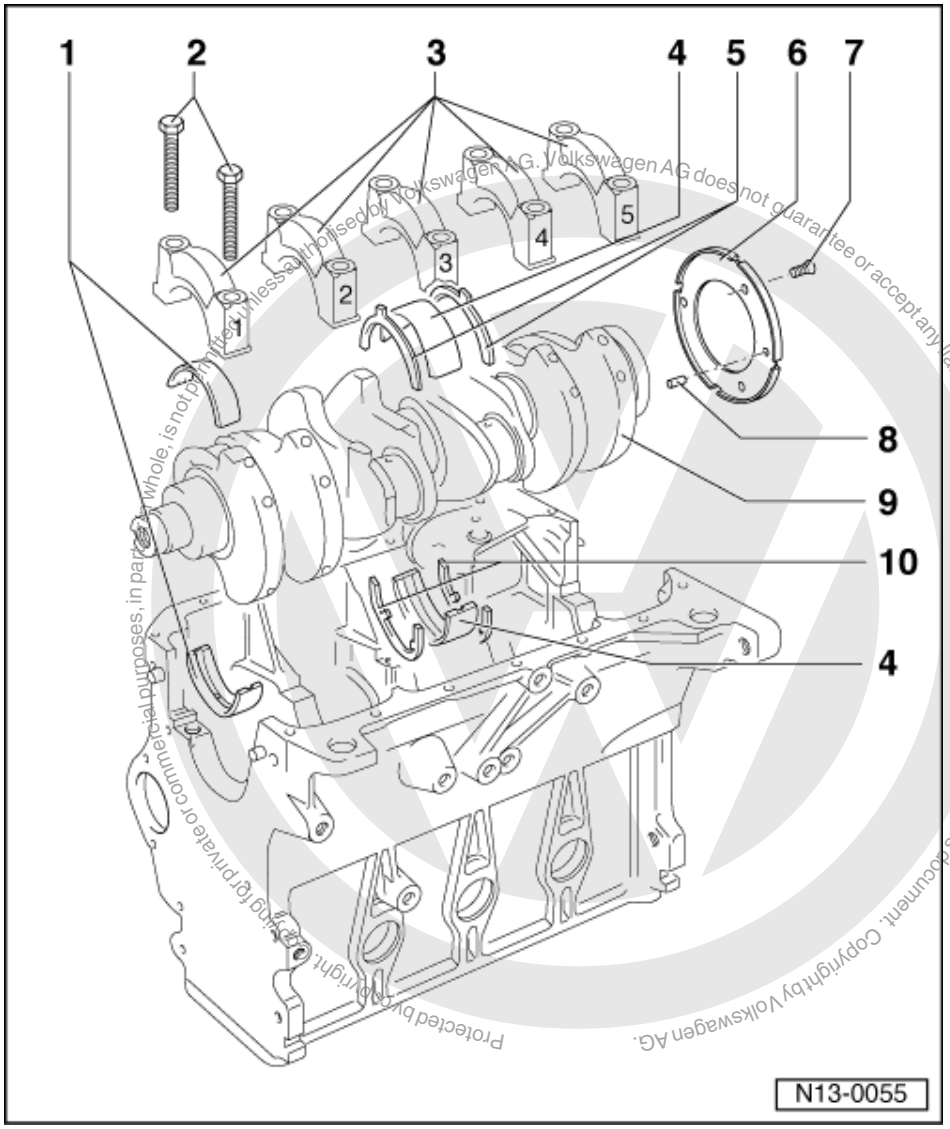

Protected by copyright. Copying for private or commercial purposes, in part or in whole, is not permitted unless authorised by Volkswagen AG. Volkswagen AG does not guarantee or accept any liability with respect to the correctness of information in this document. Copyright by Volkswagen AG.

satelettronica

1 Bearing shells 1, 2, 4 and 5
- For bearing caps without oil groove
- For cylinder block with oil groove
- Do not interchange used bearing shells (mark)

2 65 Nm + 1/4turn (90 °) further
- Renew
- To measure radial clearance tighten to 65 Nm but not further
- The quarter turn further can be done in several stages.

3 Bearing cap
- Bearing cap 1: Pulley end
- Bearing cap 3 with recesses for thrust washers
- Bearing shell retaining lugs (cylinder block/bearing cap) must be on the same side

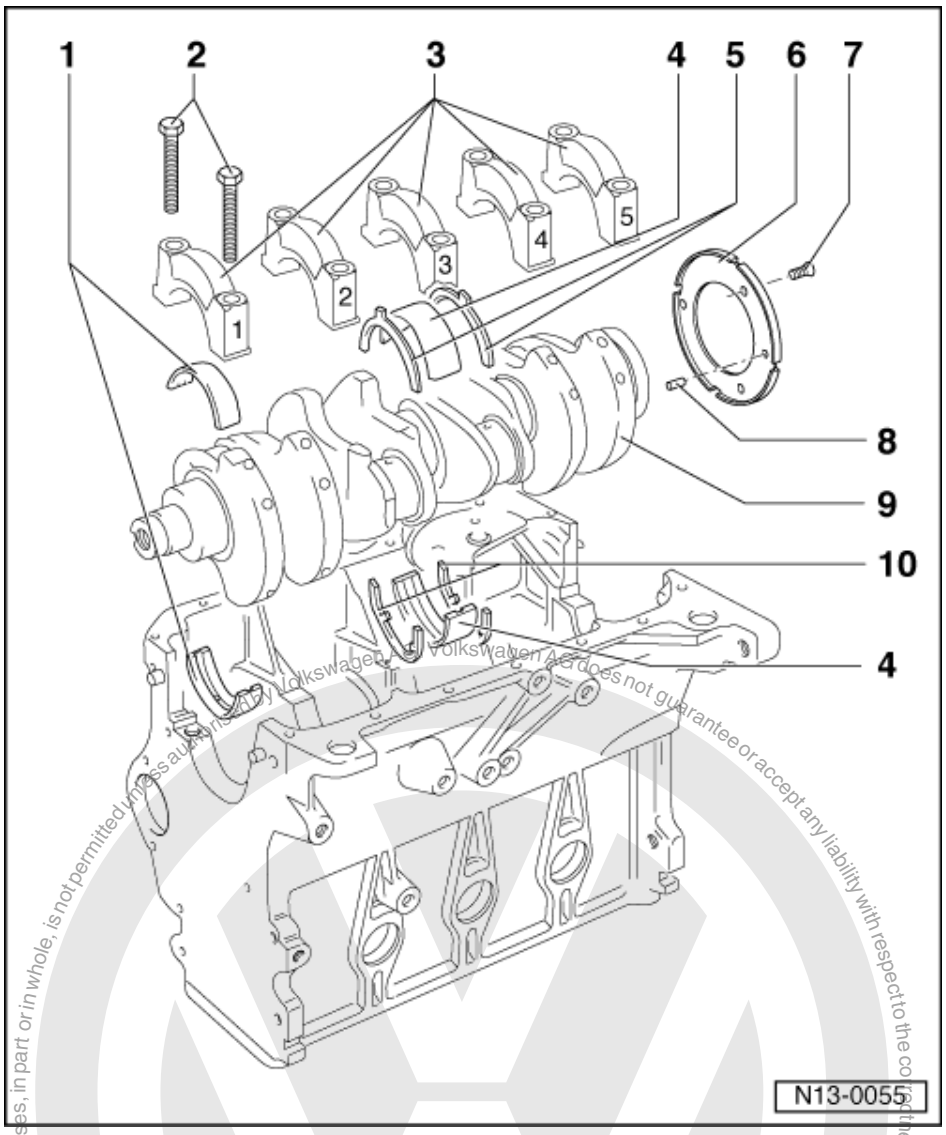

4 Bearing shell 3
- For bearing cap without oil groove
- For cylinder block with oil groove

5 Thrust washer
- For bearing cap 3
- Note fixing arrangement

6 Sender wheel
- For engine speed sender (G28)
- Only engine codes AGD, AHG, AKU, ASX

7 10 Nm + 1/4 turn (90 °) further
- Renew
- The quarter turn further can be done in several stages.

8 Fitted pin
- Checking projection from crankshaft => Fig. 1
- Only engine codes AGD, AHG, AKU, ASX

Protected by copyright. Copyright by Volkswagen AG. Volkswagen AG does not guarantee or accept any liability with respect to the correctness of information in this document. Copyright by Volkswagen AG. Protected by copyright. Commercial purposes, in part or in whole, is not permitted unless authorised by Volkswagen AG.
satelettronica

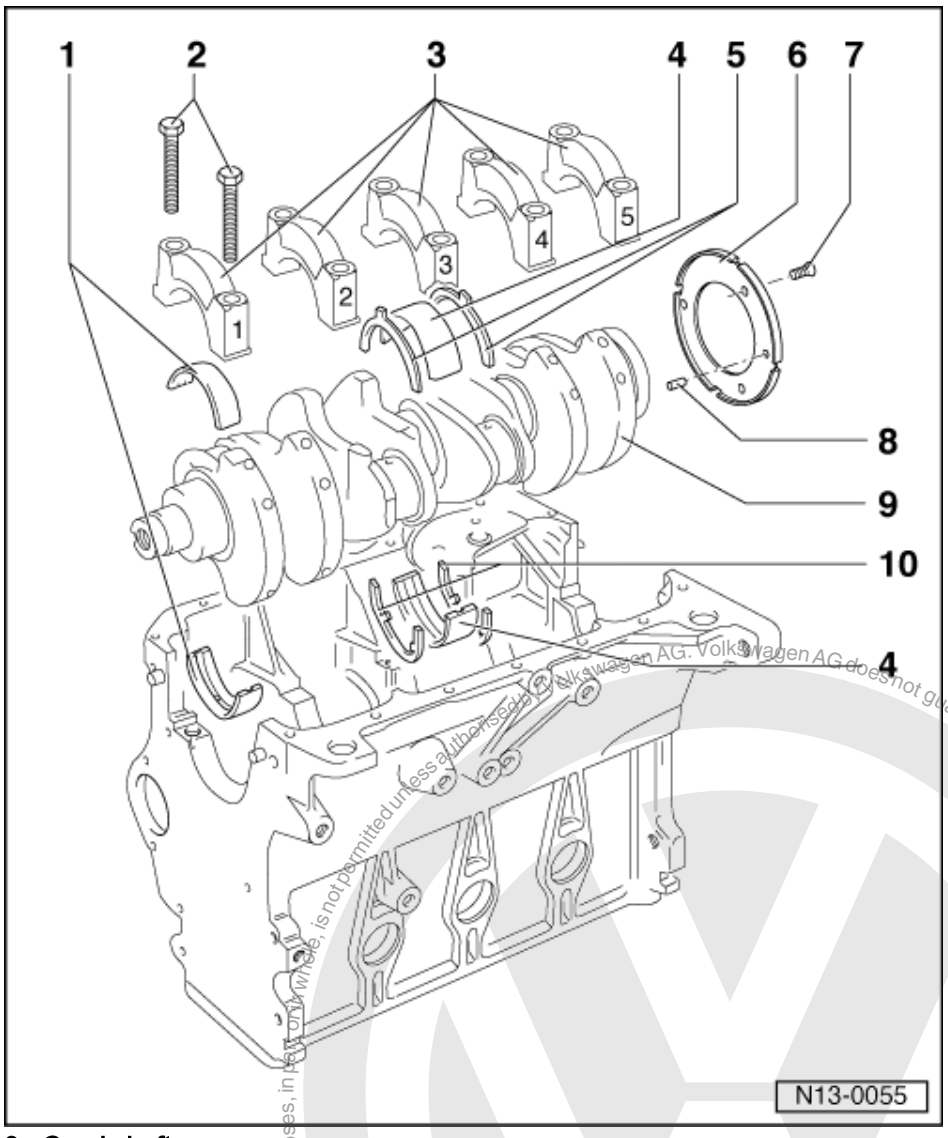

9 Crankshaft

- Axial clearance new: 0.07...0.17 mm
  Wear limit: 0.37 mm
- Check radial clearance with Plastigage
  New: 0.03...0.08 mm
  Wear limit: 0.17 mm
- Do not rotate the crankshaft when checking the radial clearance
- Crankshaft dimensions
  => Page 37

10 Thrust washer

- For cylinder block, bearing 3

Protected by copyright. Copying for private or commercial purposes, in part or in whole, is not permitted unless authorised by Volkswagen AG. Volkswagen AG does not guarantee or accept any liability with respect to the correctness of information in this document. Copyright by Volkswagen AG.
satelettronica

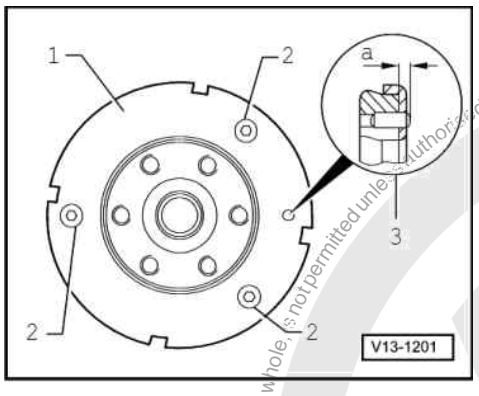

-> Fig. 1 Checking fitted pin projection out of crankshaft

Special tools, workshop equipment, testers, measuring instruments and auxiliary items required

- Depth gauge

Test sequence

- Use depth gauge to check projection -a- of fitted pin beyond crankshaft with sender wheel -1- removed.

  1 - Sender wheel
  2 - Securing bolt
  3 - Projection of fitted pin: a =2.5...3.0 mm

3.2 - Crankshaft dimensions

(in mm)

Honing dimension	Main journal -ø	Conrod journal-ø
Basic dimension	-0.022 54.00 -0.042	-0.022 47.80 -0.042
1st undersize	-0.022 53.75 -0.042	-0.022 47.55 -0.042
2nd undersize	-0.022 53.50 -0.042	-0.022 47.30 -0.042
3rd undersize	-0.022 53.25 -0.042	-0.022 47.05 -0.042

Protected by copyright. Copyright by Volkswagen AG. Volkswagen AG does not guarantee or accept any liability with respect to the correctness of information in this document. Copyright by Volkswagen AG. Copying for private or commercial purposes, in part or in whole, is not permitted unless authorised by Volkswagen AG.
satelettronica

4 - Dismantling and assembling pistons and conrods

4.1 - Dismantling and assembling pistons and conrods

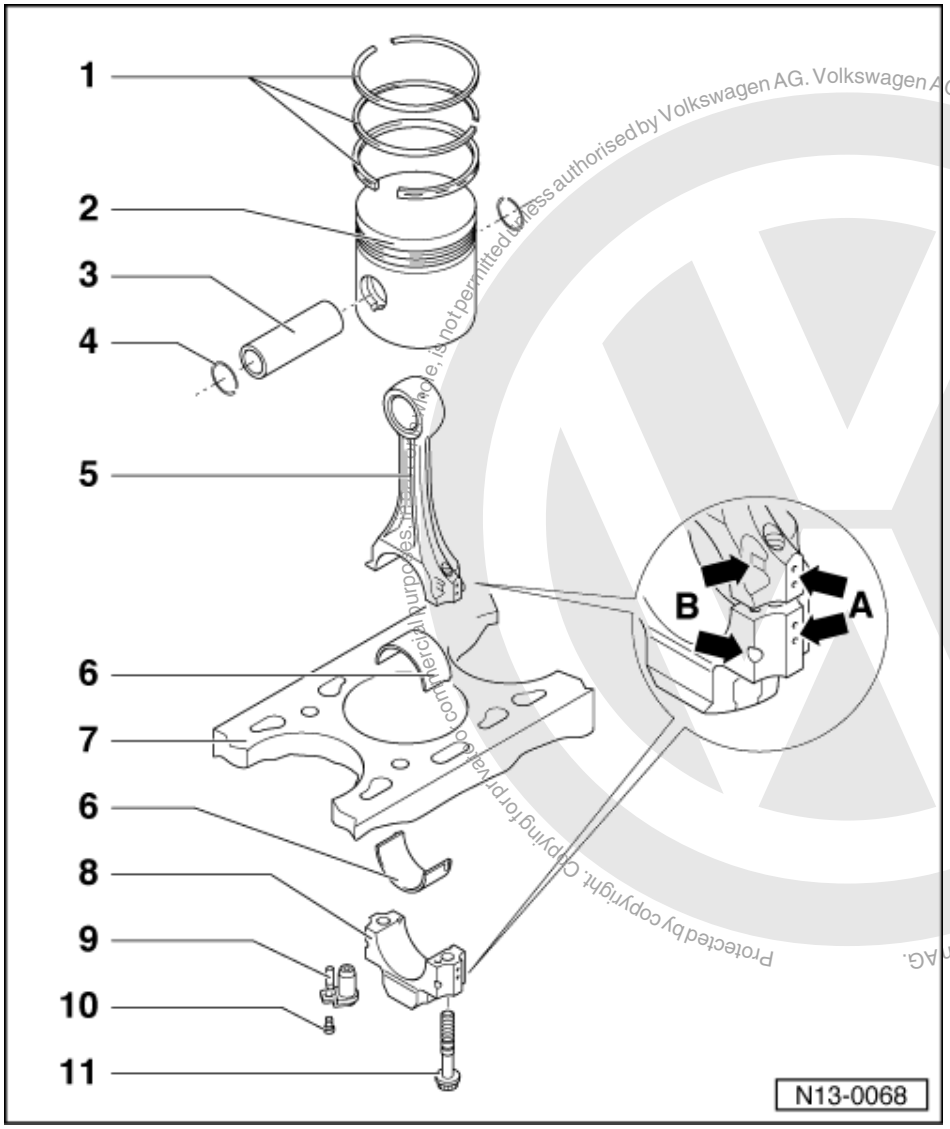

1 Piston ring

- Offset gaps by 120 °
- Remove and install with piston ring pliers
- "TOP" faces towards piston crown
- Checking ring gap=> Fig. 1
- Checking ring to groove clearance
  => Fig. 2

Protected by copyright. Copying for private or commercial purposes, in any form and by any means, is not permitted unless authorised by Volkswagen AG. Volkswagen AG does not guarantee or accept any liability with respect to the correctness of information in this document. Copyright by Volkswagen AG.
satelettronica

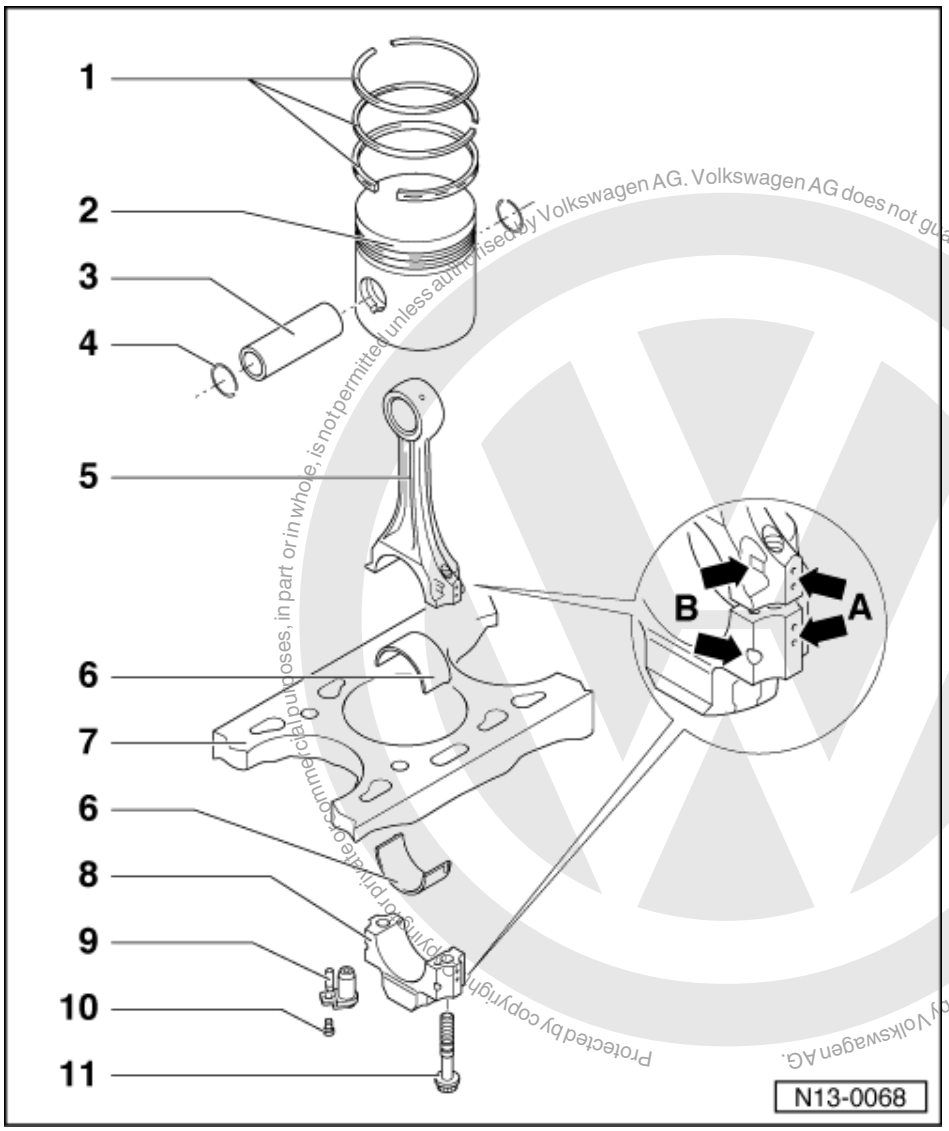

Protected by copyright. Copyright by Volkswagen AG. Volkswagen AG does not guarantee or accept any liability with respect to the correctness of information in this document. Copyright by Volkswagen AG. Volkswagen AG is not permitted unless authorised by Volkswagen AG. Volkswagen AG does not guarantee or accept any liability with respect to the correctness of information in this document. Copyright by Volkswagen AG.
satelettronica

2 Piston

- Engine codes AGD, AHG, AKU, ASX with combustion chamber
- Mark installation position and cylinder number
- Mark installation position and allocation piston/cylinder number for engine codes AGD, AHG, AKU, ASX => Fig. 4
- Arrow on piston crown points to pulley end
- Install using piston ring clamp
- Cracks on piston skirt, renew piston
- Checking piston projection at TDC =>Page 45

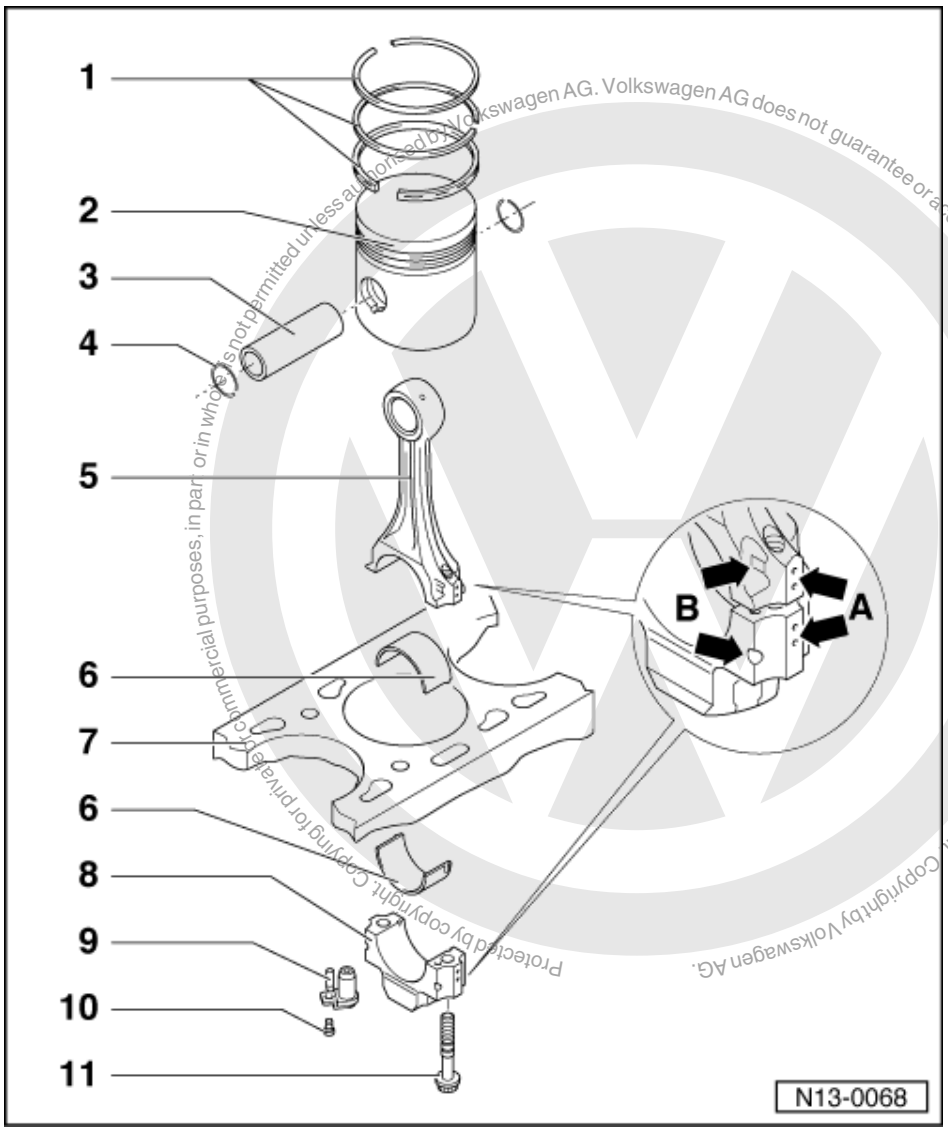

Protected by copyright. Copying for private or commercial purposes, in part or in whole, is not permitted unless authorised by Volkswagen AG. Volkswagen AG does not guarantee or accept any liability with respect to the correctness of information in this document. Copyright by Volkswagen AG.

satelettronica

3 Piston pin
- If difficult to remove, heat piston to 60 °C
- Remove and install with drift VW 222a
- ø = 26 mm for engine codes AGD, ASX
  ø = 24 mm for engine codes AEF, AHG, AKU

4 Circlip

5 Conrod
- Only renew as a set
- Mark cylinder number -A-
- Installation position:
  Marking -B- faces towards pulley end
- Length:
  Engine codes
  AGD, ASX = 144 mm
  AEF, AHG, AKU = 150 mm

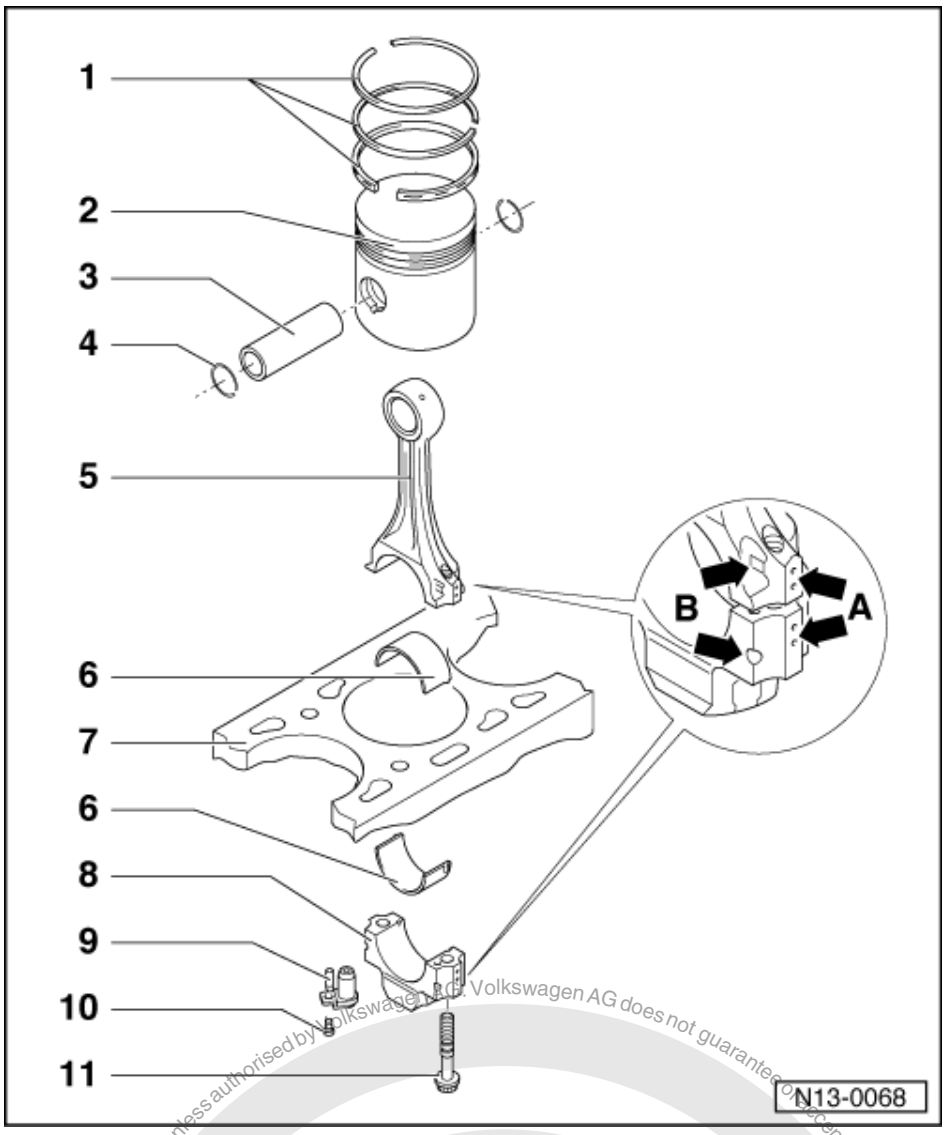

6 Bearing shell
- Note installation position
- Do not interchange used bearing shells
- Ensure retaining lugs fit tightly in recesses
- Axial clearance
  Wear limit: 0.37 mm
- Check radial clearance with Plastigage:
  Wear limit: 0.08 mm
  Do not rotate crankshaft when checking radial clearance
- Width:
  Engine codes
  AGD, ASX = 20 mm
  AEF, AHG, AKU = 19 mm

7 Cylinder block
- Checking cylinder bores
  =>Fig. 3
- Piston and cylinder dimensions
  =>Page 47

Protected by copyright. Copying for private or commercial purposes, in part or in whole, is not permitted unless authorised by Volkswagen AG. Volkswagen AG does not guarantee or accept any liability with respect to the correctness of information in this document. Copyright by Volkswagen AG.
satelettronica

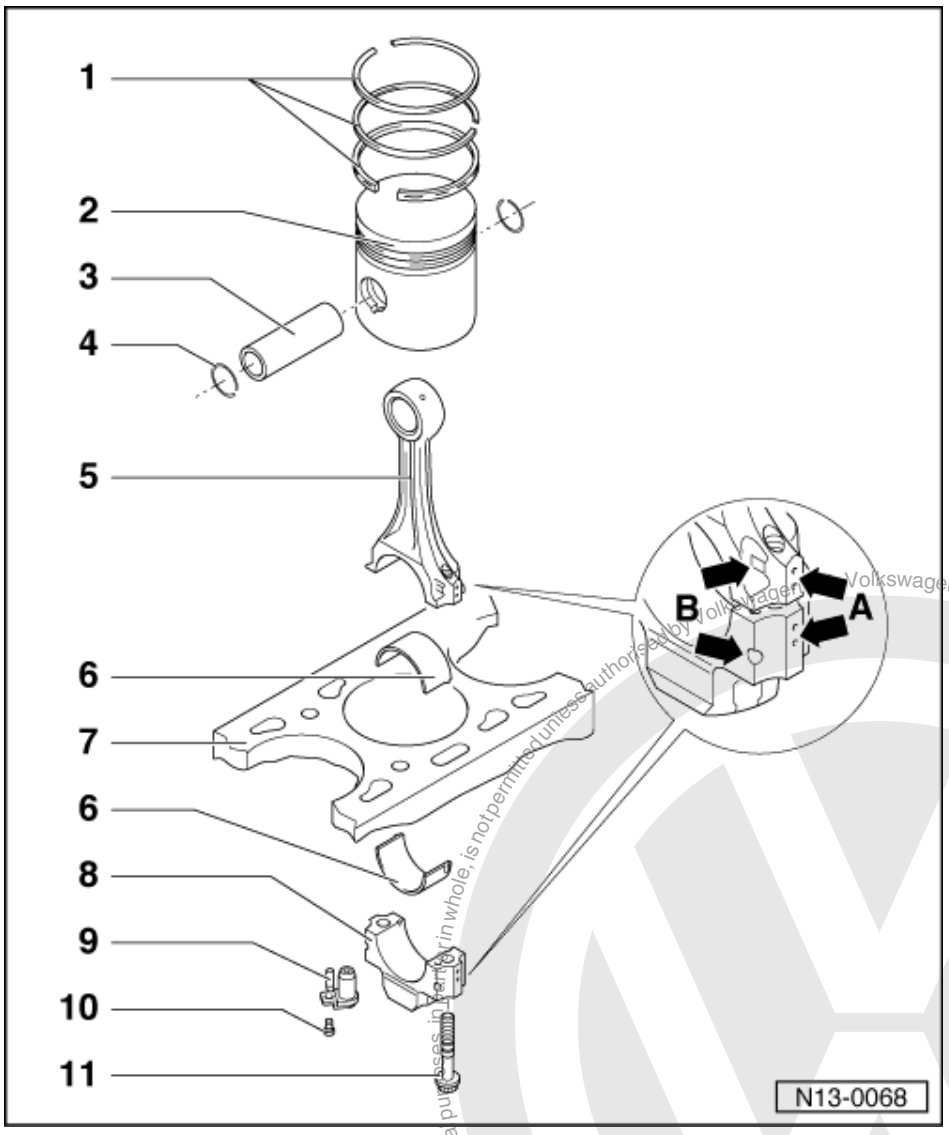

8 Conrod bearing cap
- Note installation position

9 Oil spray jet
- For piston cooling

10 10 Nm
- Install with locking fluid AMV 188 100 02

11 Conrod bolt, 30 Nm + 1/4 turn (90 °) further
- Renew
- Oil threads and contact surface
- To measure radial clearance use old bolts
- The quarter turn further can be done in several stages.

Volkswagen AG does not guarantee or accept any liability with respect to the correctness of information in this document. Copyright by Volkswagen AG.
Protected by copyright. Copying for private or commercial purposes, in part or in whole, is not permitted unless authorised by Volkswagen AG.
satelettronica

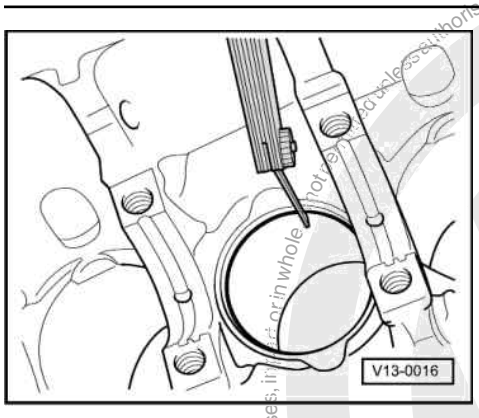

-> Fig. 1 Checking piston ring gap

Special tools, workshop equipment, testers, measuring instruments and auxiliary items required

- Feeler gauge

Test sequence

- Push ring squarely from above down to approx. 15 mm from bottom end of cylinder.

Piston ring Dimensions in mm	New	Wear limit
1st Compression ring AGD, AHG, AKU AEF	0.20...0.40 0.20...0.40	1.0 1.2
2nd Compression ring AGD, AHG, AKU AEF	0.20...0.40 0.20...0.40	1.0 0.6
Oil scraper ring AGD, AHG, AKU AEF	0.25...0.50 0.25...0.50	1.0 1.2

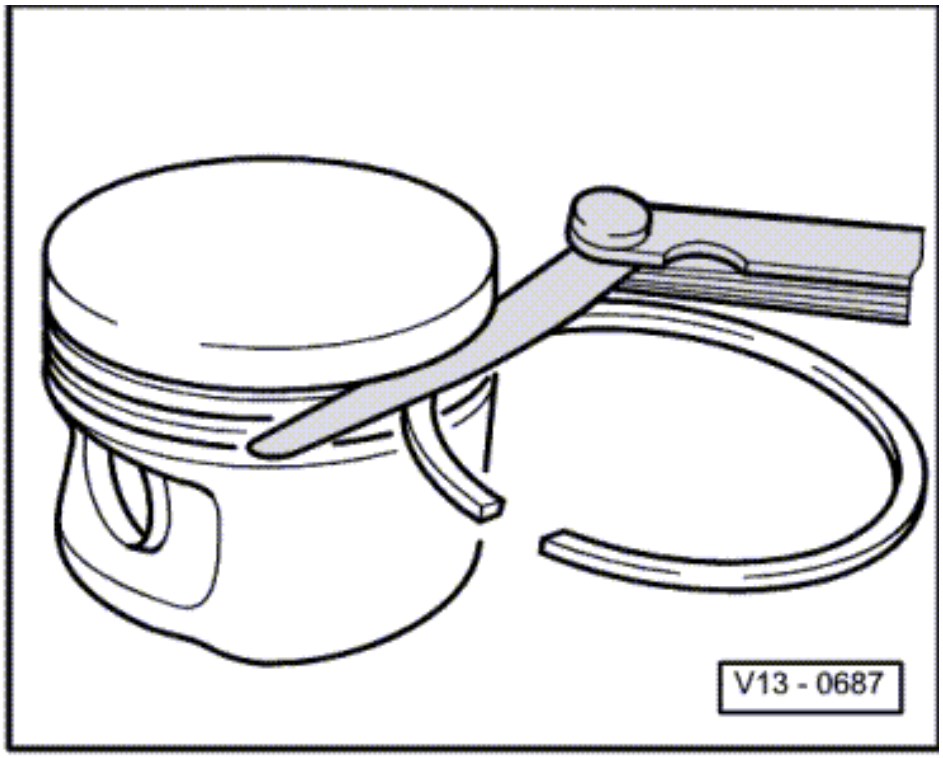

Protected by copyright. Copying for private or commercial purposes, in part or in whole, is not permitted unless authorised by Volkswagen AG. Volkswagen AG does not guarantee or accept any liability with respect to the correctness of information in this document. Copyright by Volkswagen AG.
satelettronica

-> Fig. 2 Checking ring to groove clearance

Special tools, workshop equipment, testers, measuring instruments and auxiliary items required

- Feeler gauge

Test sequence

Clean groove before check.

Piston ring Dimensions in mm	New	Wear limit
1st Compression ring AGD, AHG, AKU AEF	0.06...0.09 0.09...0.12	0.25 0.25
2nd compression ring	0.05...0.08	0.25
Oil scraper ring	0.03...0.06	0.15

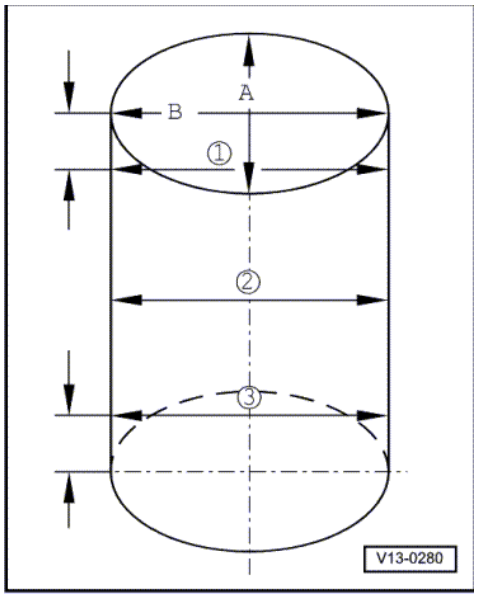

-> Fig. 3 Checking cylinder bores

Special tools, workshop equipment, testers, measuring instruments and auxiliary items required

- Internal dial gauge 50...100 mm

Test sequence

- Take measurements at 3 positions in both lateral -A- and longitudinal -B- directions, as illustrated. Deviation from nominal dimension
  max. 0.10 mm

Note:

Measuring the cylinder bores must not be done when the cylinder block is mounted on a repair stand with adapter bracket VW 540, as incorrect measurements would then be possible.

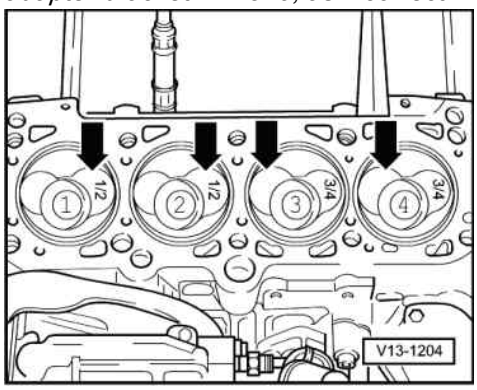

satelettronica
Protected by copyright. Copying for private or commercial purposes, in part or in whole, is not permitted unless authorised by Volkswagen AG. Volkswagen AG does not guarantee or accept any liability with respect to the correctness of information in this document. Copyright by Volkswagen AG.

-> Fig.4 Piston installation position and piston/cylinder allocation

(Engine codes AGD, AHG, AKU, ASX)

Piston in cylinders 1 and 2:

Larger inlet valve chamber towards flywheel -arrows-

Piston in cylinders 3 and 4:

Larger inlet valve chamber towards belt pulley side -arrows-.

Note:

New piston allocation to cylinders is shown by a coloured marking on piston crown.

- Piston for cylinder 1 and 2:
  marked 1/2
- Piston for cylinder 3 and 4:
  marked 3/4

4.2 - Checking piston projection at TDC

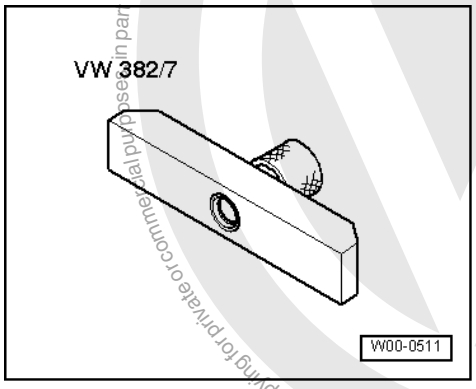

Special tools, workshop equipment, testers, measuring instruments and auxiliary items required

- VW 382/7 Measuring device

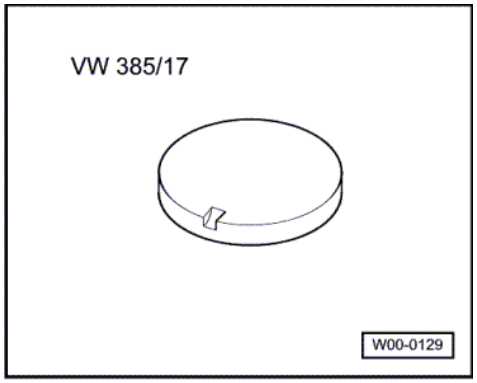

- VW 385/17 End plate
- Dial gauge

Protected by copyright. Copying for private or commercial purposes, in part or in whole, is not permitted unless authorised by Volkswagen AG. Volkswagen AG does not guarantee or accept any liability with respect to the correctness of information in this document. Copyright by Volkswagen AG.
satelettronica

Test sequence

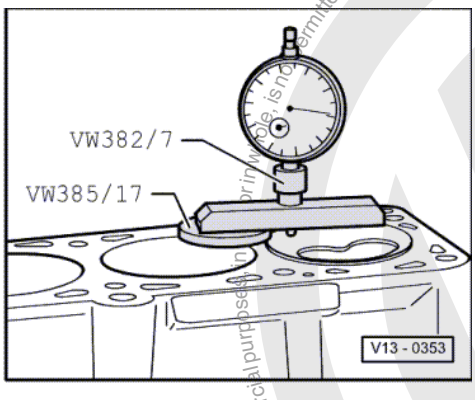

-> Piston projection at TDC must be measured when installing new pistons or a short engine. Depending upon piston projection, install the corresponding cylinder head gasket according to following table:

Engine code AEF

Piston projection	Identification Holes/notches
0.66 mm ... 0.86 mm	1
0.87 mm ... 0.90 mm	2
0.91 mm ... 1.02 mm	3

Engine codes AGD, AHG, AKU, ASX

Piston projection	Identification Holes/notches
0.91 mm ... 1.00 mm	1
1.01 mm ... 1.10 mm	2
1.11 mm ... 1.20 mm	3

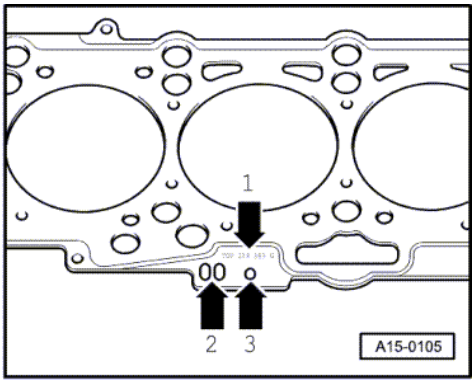

-> Cylinder head gasket identification

- Part No. = arrow 1
- Production control code = arrow 2 (can be disregarded)
- Holes = arrow 3

Note:

If differing figures are obtained when measuring piston projection, the highest figure should be taken when selecting the gasket.

Protected by copyright. Copying for private or commercial purposes, in part or in whole, is not permitted unless authorised by Volkswagen AG. Volkswagen AG does not guarantee or accept any liability with respect to the correctness of information in this document. Copyright by Volkswagen AG.
satelettronica

4.3 - Piston and cylinder dimensions

Engine code AEF

Honing dimension		Piston-ø	Cylinder bore-ø
Basic dimen.	mm	79.48	79.51
1st oversize	mm	79.73	79.76
2nd oversize	mm	79.98	80.01

Engine codes AGD, AHG, AKU, ASX

Honing dimension		Piston-ø	Cylinder bore-ø
Basic dimen.	mm	79.47	79.51
1st oversize	mm	79.72	79.76
2nd oversize	mm	79.97	80.01

Protected by copyright. Copying for private or commercial purposes, in part or in whole, is not permitted unless authorised by Volkswagen AG. Volkswagen AG does not guarantee or accept any liability with respect to the correctness of information in this document. Copyright by Volkswagen AG.
satelettronica

15 - Cylinder head, Valve gear

1 - Removing and installing cylinder head

1.1 - Removing and installing cylinder head

Checking compressions=> Page 70

Notes:

- When installing an exchange cylinder head with fitted camshaft, the contact surfaces between the bucket tappets and the cam must be oiled before installing the cylinder head cover.
- The plastic packing pieces for protecting the open valves must not be removed until immediately before fitting cylinder head.
- If the cylinder head is replaced, all the coolant in the system must also be renewed.

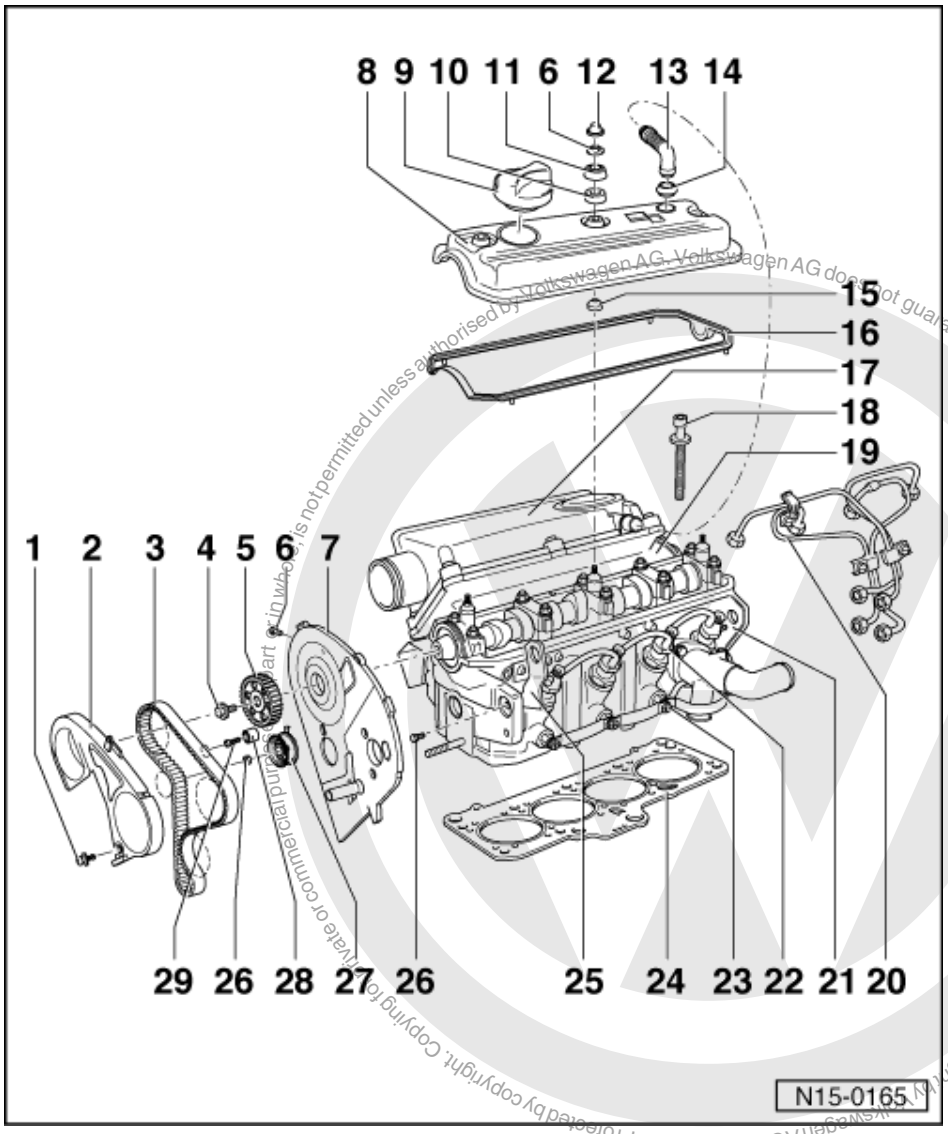

1 Expanding clip
2 Toothed belt guard - upper part
3 Toothed belt

satelettronica

- Mark D.O.R. before removing
- Check for wear
- Do not kink
- Removing, installing and tensioning
  => Page 57

4 45 Nm

5 Camshaft sprocket

- Drive from camshaft taper using hammer and drift through hole in rear toothed belt guard => Page 57 , Removing, installing and tensioning toothed belt

6 10 Nm

7 Rear toothed belt guard

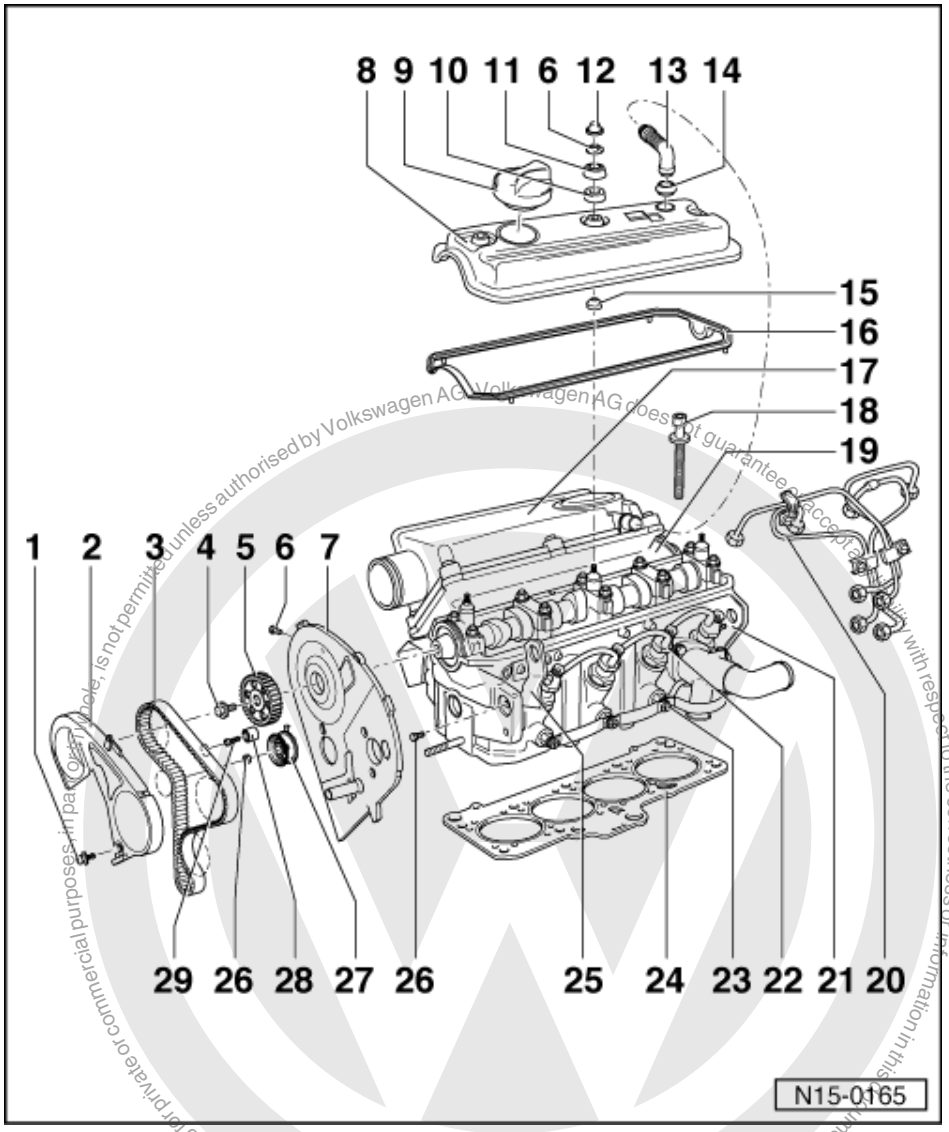

8 Cylinder head cover

9 Cap

- Renew seal if damaged

10 Upper sealing washer

- Renew if damaged
- Note fitting position

11 Dished washer

- Note fitting position

12 Cap

- Not present on all engines

satelettronica

13 Connecting hose

14 Gasket

- Renew if damaged

15 Lower sealing cone

- Renew if damaged
- Note fitting position

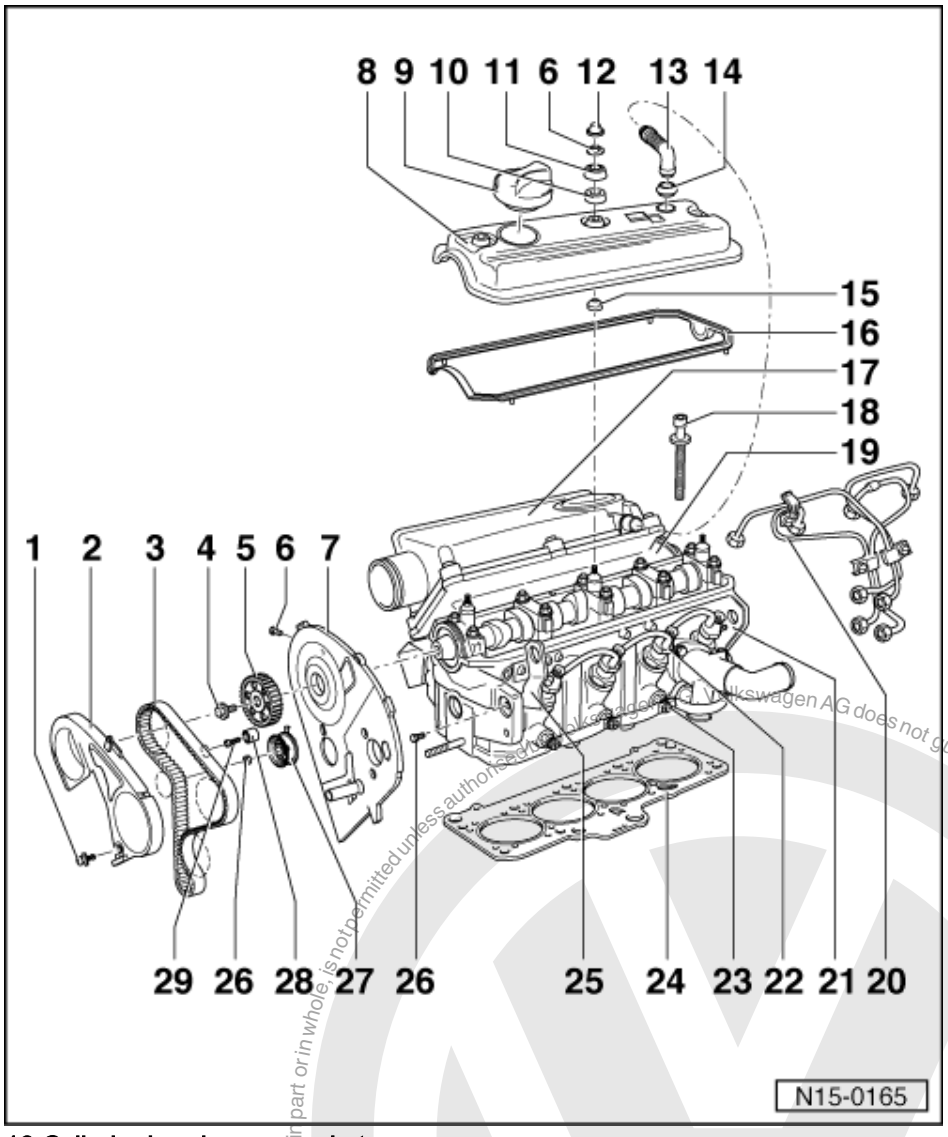

16 Cylinder head cover gasket

- Renew if damaged or leaking
- Note fitting position
- Insert projections into holes on cylinder head
- Before fitting gasket coat transition between bearing cap/cylinder head with "D2"

17 Intake manifold cover

- Removing and installing
  => Page 55 , Removing and installing intake manifold

18 Cylinder head bolt

- Renew
- Note sequence when loosening and tightening
  => Page 67 , removing and installing cylinder head

19 Intake manifold

- Removing and installing

satelettronica
Protected by copyright. Copying for private or commercial purposes, in part or in whole, is not permitted unless authorised by Volkswagen AG. Volkswagen AG does not guarantee or accept any liability with respect to the correctness of information in this document. Copyright by Volkswagen AG.

=> Page 55

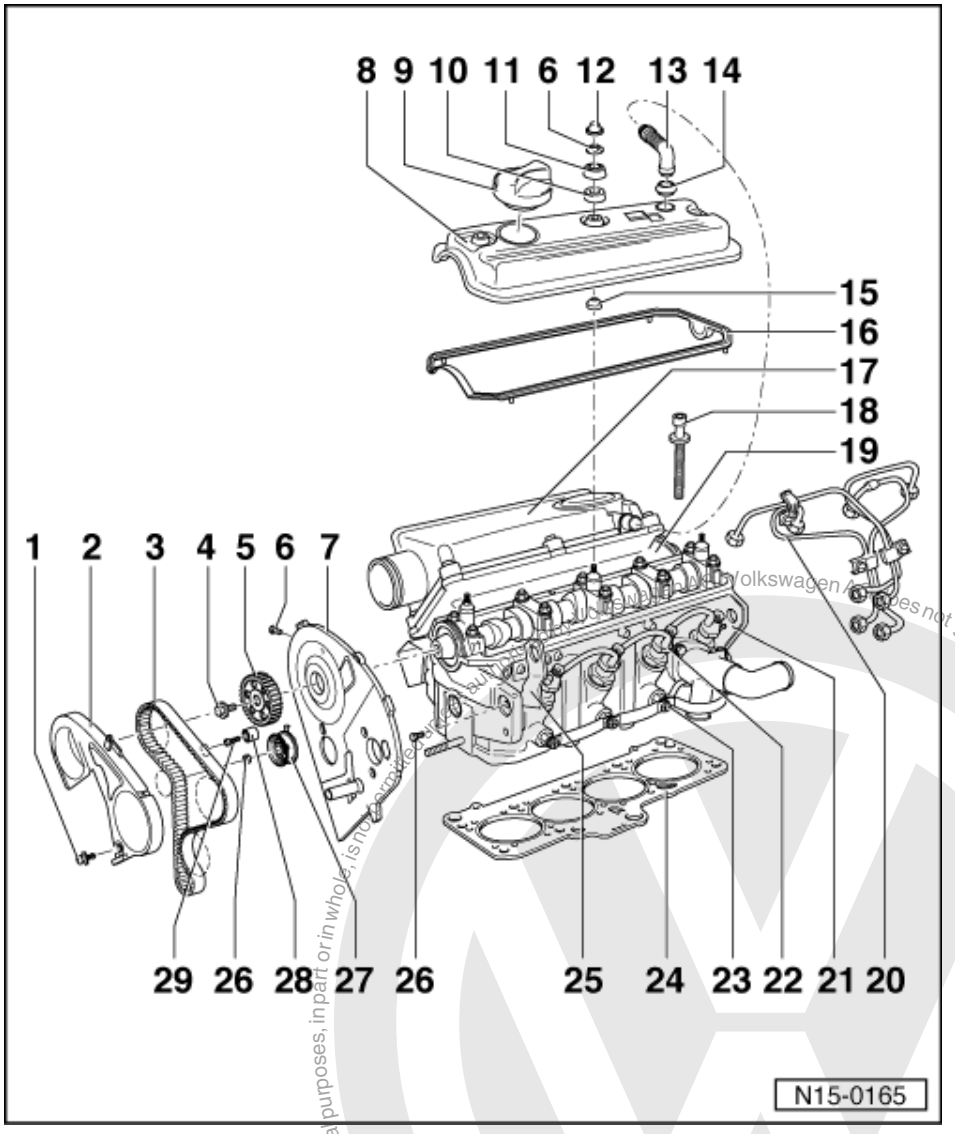

20 Injector pipes

- Tighten to 25 Nm
- Remove with ring spanner 3035
- Always remove pipework complete
- Do not alter shape

21 Cylinder head

- Check for distortion => Fig. 1
- Removing and installing => Page 67
- If replaced renew the complete coolant

22 Injector

- Removing and installing for engine code AEF:

=> Repair group 23; Servicing fuel injection system; Removing and installing injectors Servicing fuel injection system Removing and installing injectors

- Removing and installing for engine codes AGD, AHG, AKU, ASX:

Protected by copyright. Copying for private or commercial purposes, in part or in whole, is not permitted unless authorised by Volkswagen AG. Volkswagen AG does not guarantee or accept any liability with respect to the correctness of information in this document. Copyright by Volkswagen AG.
satelettronica

=> Repair group 23; Servicing Diesel direct system; Removing and installing injectors Servicing Diesel direct system Removing and installing injectors

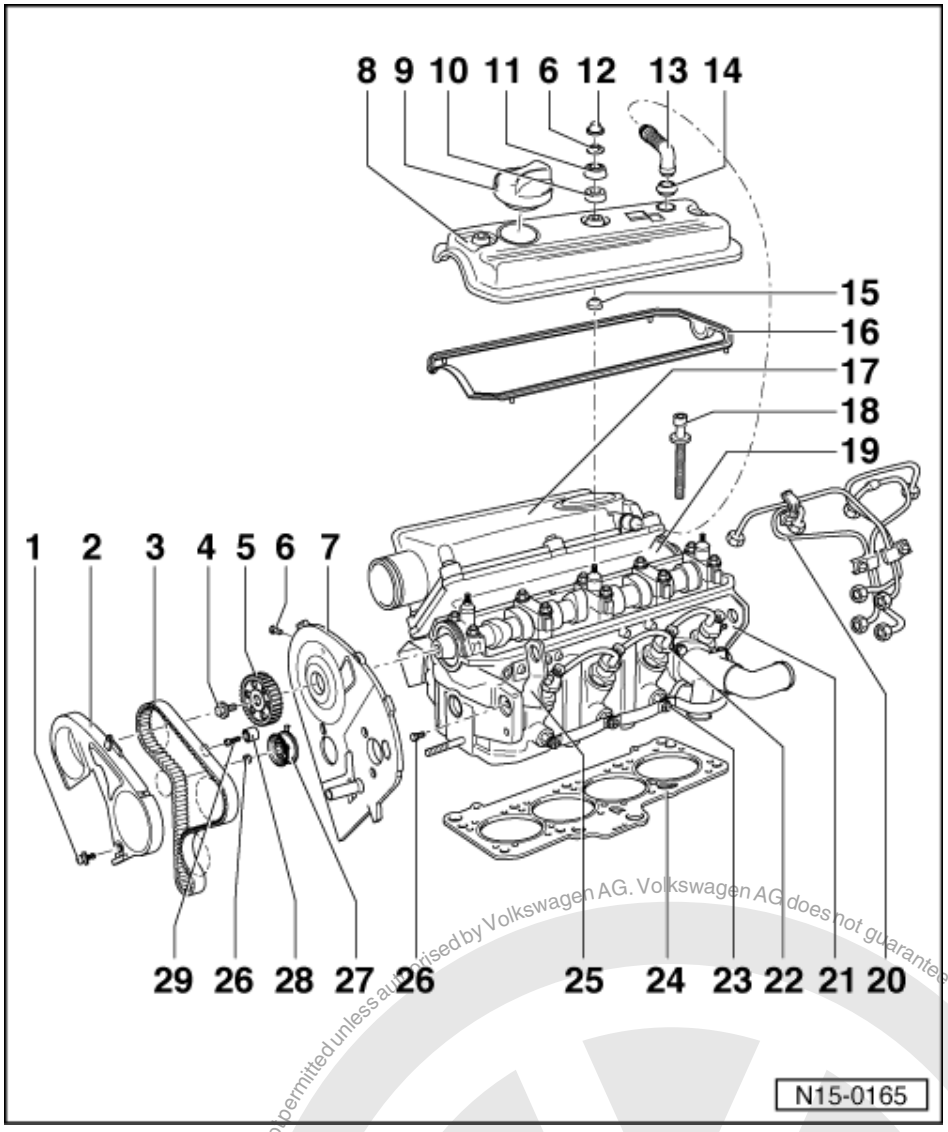

23 Glow plug

- For engine codes AGD, AHG, AKU, ASX tighten to 15 Nm, for engine code AEF tighten to 25 Nm
- Checking:

=> Repair group 28; Checking glow plug system; Checking glow plugs Checking glow plug system Checking glow plugs

24 Cylinder head gasket

- Renew
- Note marking =>Fig. 2
- If replaced renew the complete coolant

25 Lifting eye

26 20 Nm

27 Tensioning roller

- Checking semi-automatic toothed belt tensioning roller => Page 24
- Tensioning toothed belt

Protected by copyright. Copying for private or commercial purposes, in part or in whole, is not permitted unless authorised by Volkswagen AG. Volkswagen AG does not guarantee or accept any liability with respect to the correctness of information in this document. Copyright by Volkswagen AG.
satelettronica

=> Page 57 , Removing, installing and tensioning toothed belt

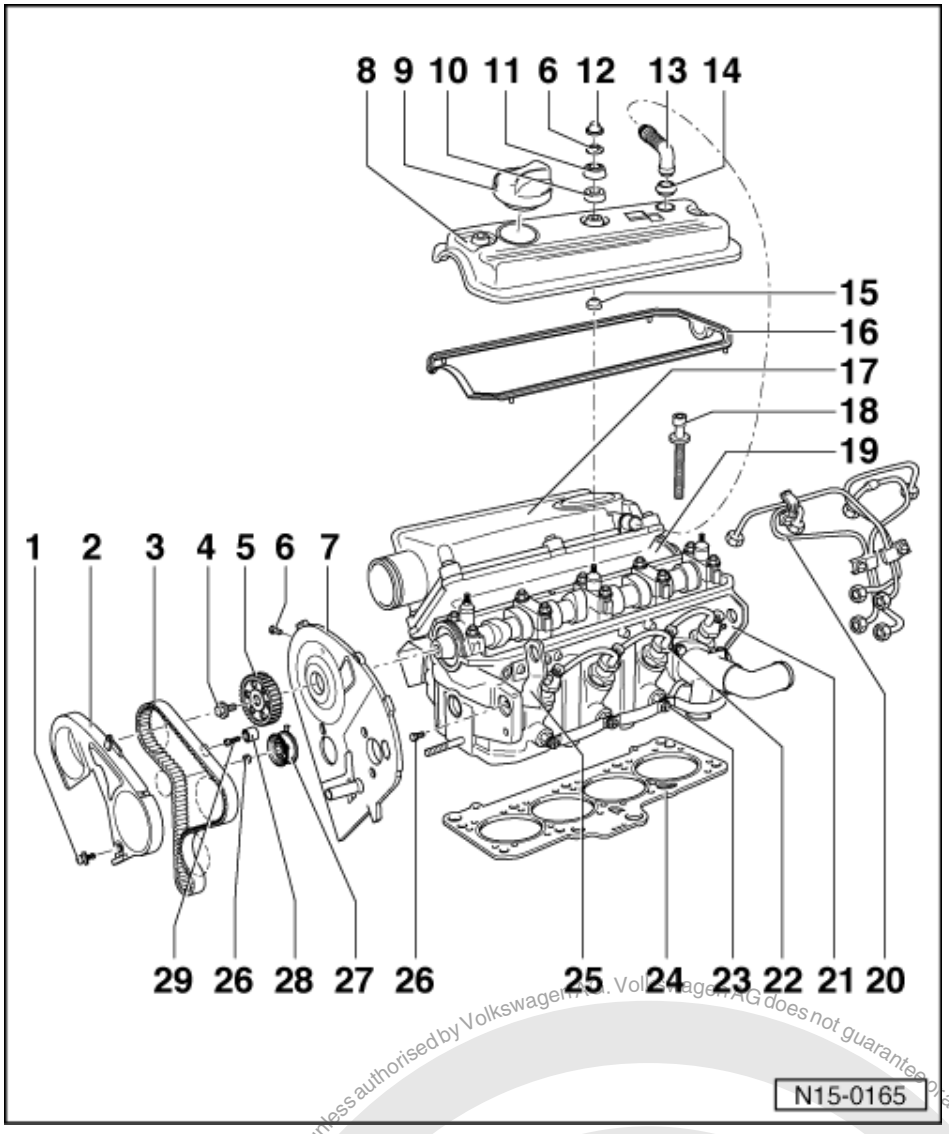

28 Idler roller

- Only engine codes AGD, AHG, AKU, ASX

29 25 Nm

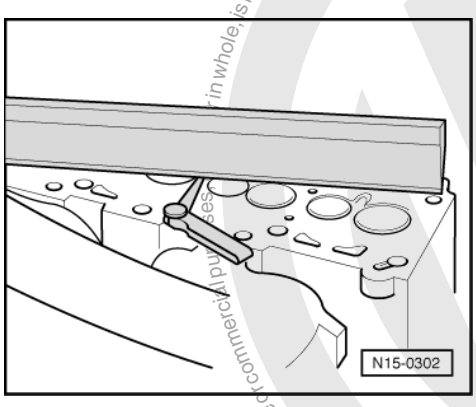

satelettronica
Protected by copyright. Copying for private or commercial purposes, in whole or in part, is not permitted unless authorised by Volkswagen AG. Volkswagen AG does not guarantee or accept any liability with respect to the correctness of information in this document. Copyright by Volkswagen AG.

-> Fig. 1 Checking cylinder head for distortion

Special tools, workshop equipment, testers, measuring instruments and auxiliary items required

- Feeler gauge
- Straight edge

Test sequence

Max. permissible distortion: 0.1 mm

Note:

Reworking diesel cylinder heads is not permissible.

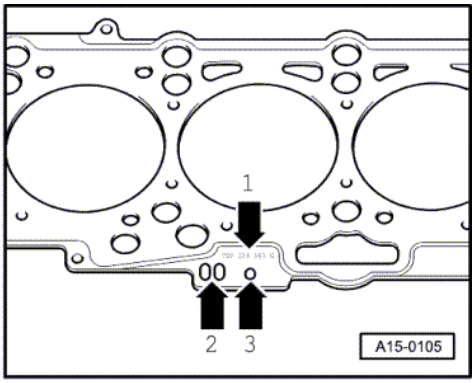

-> Fig.2 Cylinder head gasket identification

- Part No. = arrow 1
- Production control code = arrow 2 (can be disregarded)
- Holes = arrow 3

Note:

Different thicknesses of cylinder head gasket are fitted depending on the piston projection. When replacing the cylinder head gasket, install a new gasket with the same identification.

Protected by copyright. Copying for private or commercial purposes, in part or in whole, is not permitted unless authorised by Volkswagen AG. Volkswagen AG does not guarantee or accept any liability with respect to the correctness of information in this document. Copyright by Volkswagen AG.
satelettronica

1.2 - Removing and installing intake pipes

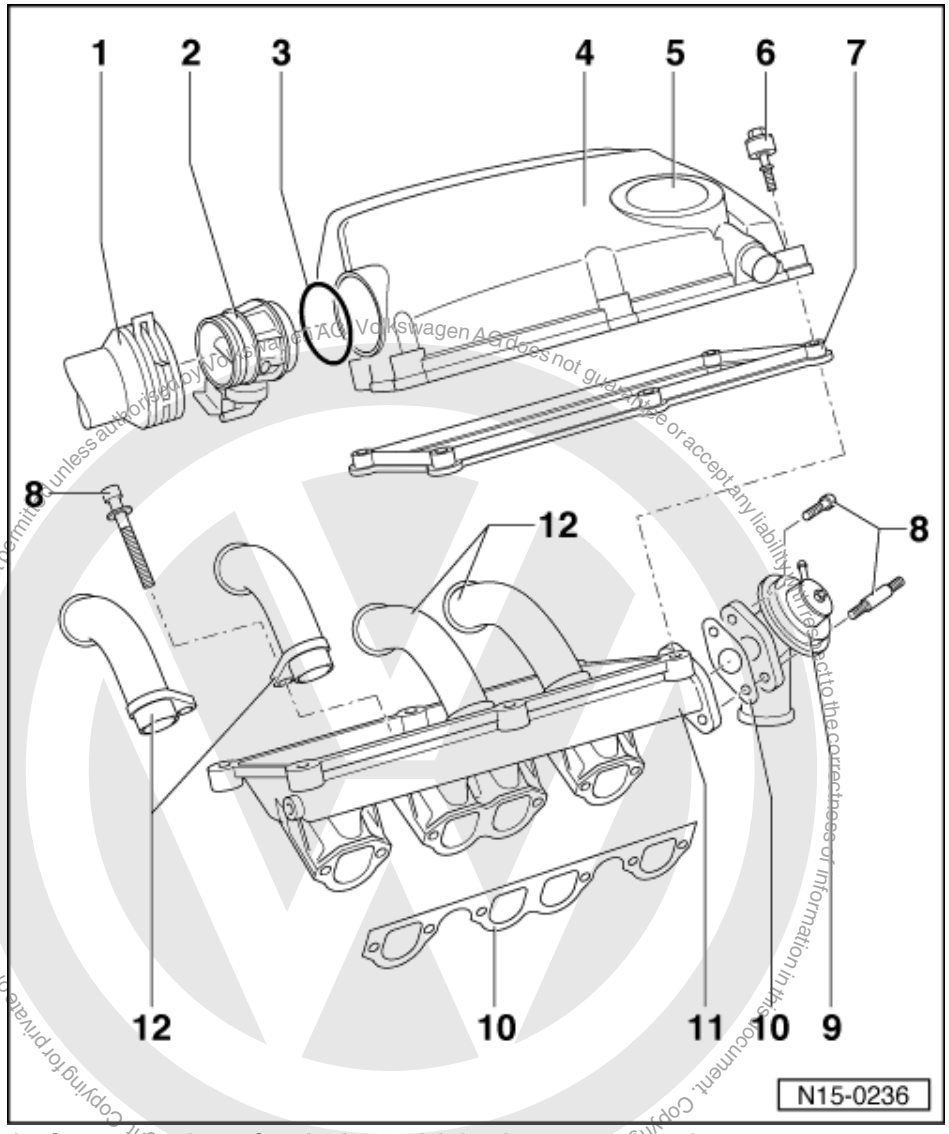

1 Connecting hose for air cleaner/air intake connecting piece
2 Air intake connecting piece
- Only engine codes AGD, AHG, AKU, ASX
- Only renew complete
- Removing and installing intake pipe

=> Repair group 23; Servicing diesel direct injection system Servicing diesel direct injection system

3 Seal
- Renew if damaged

4 Air intake cover
5 Pressure regulating valve
- For crankcase breather

6 10 Nm

satelettronica

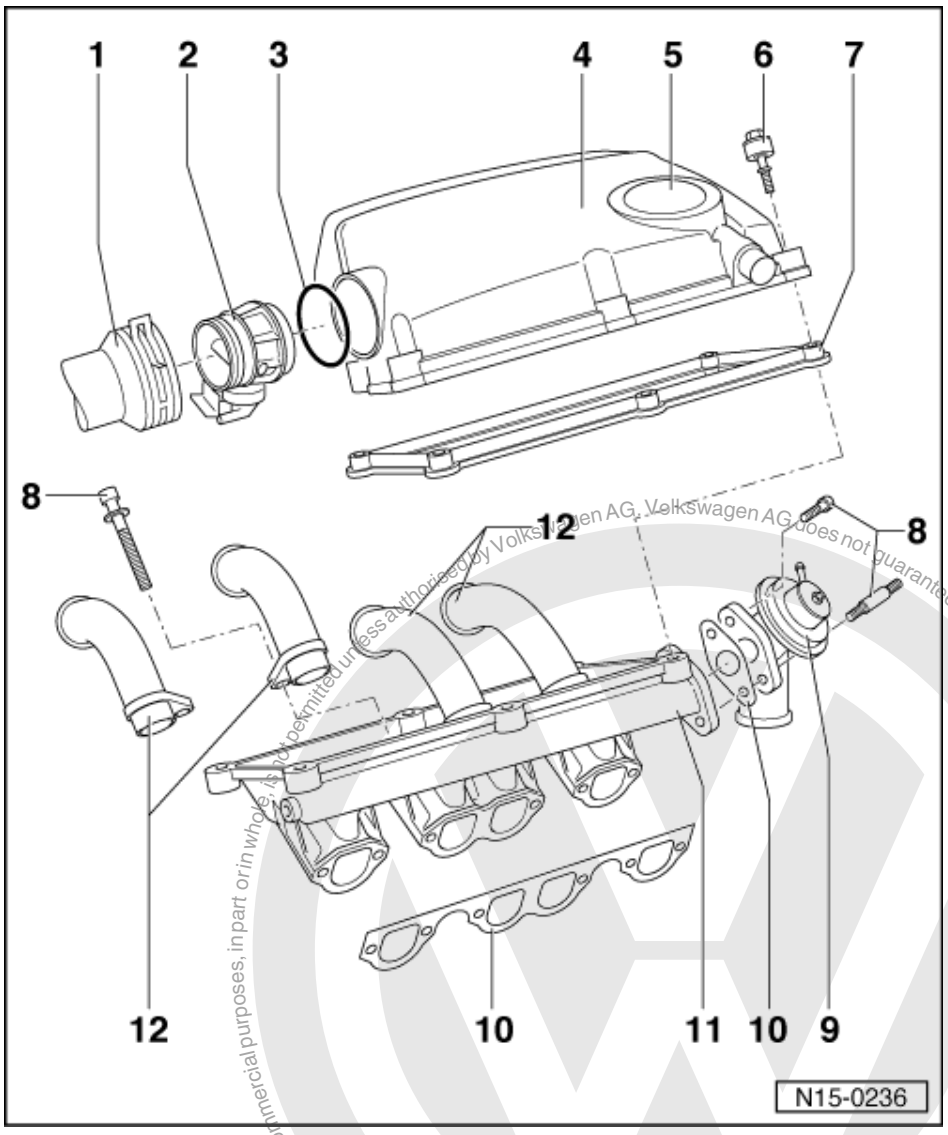

7 Gasket
- Renew if damaged

8 25 Nm

9 Exhaust gas recirculation valve (mechanical)

10 Gasket
- Renew

11 Intake pipes

12 Intake manifold
- Note differing Part No's.

Protected by copyright. Copyright by Volkswagen AG.
Copyright by Volkswagen AG, Volkswagen AG does not guarantee or accept any liability with respect to the correctness of information in this document.
Copying for private or commercial purposes, in part or in whole, is not permitted unless authorised by Volkswagen AG.
satelettronica

1.3 - Removing, installing and tensioning toothed belt

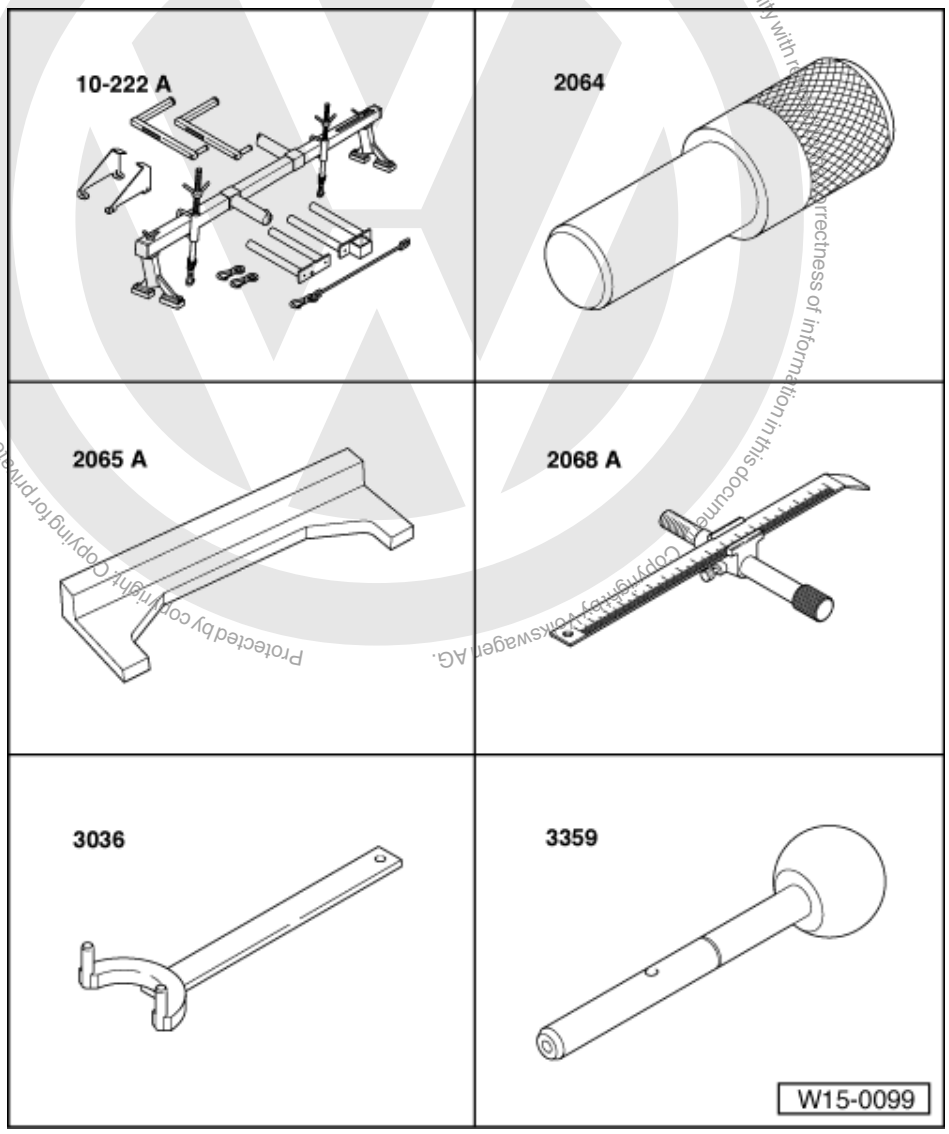

Special tools, workshop equipment, test and measuring appliances and auxiliary items required

- 10-222A Engine support bracket with legs 10-222A/1
- 2064 Mandrel (for single-part injection pump sprocket)
- 2065 A Setting bar
- 2068 A Adjustment bar (for TDC of removed engine)
- 3036 Counter hold tool
- 3359 Mandrel for diesel injection pump (for two-part injection pump sprocket)

Protected by copyright. Copying for private or commercial purposes, in part or in whole, is not permitted unless authorised by Volkswagen AG. Volkswagen AG does not guarantee or accept any liability with respect to the correctness of information in this document. Copyright by Volkswagen AG.
satelettronica

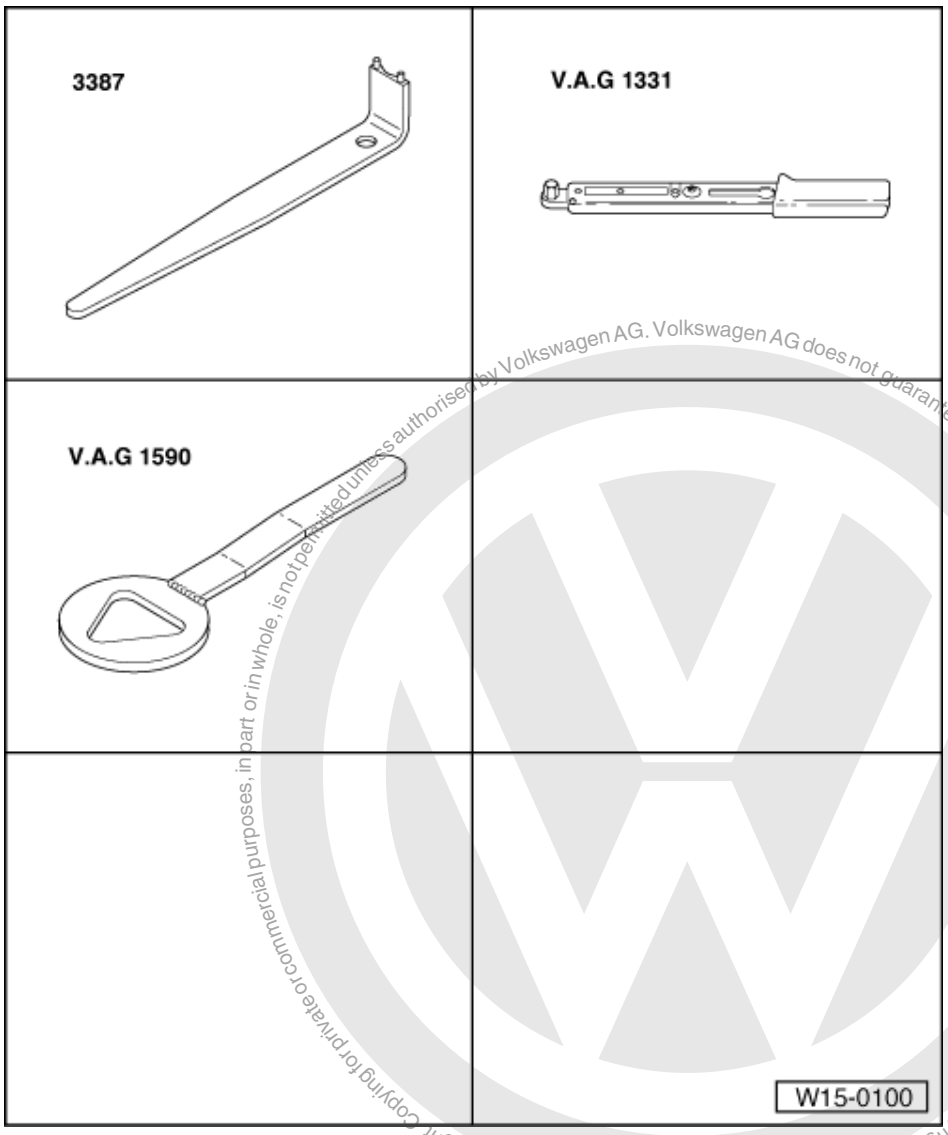

- 3387 Pin wrench
- V.A.G 1331 Torque wrench (5...50 Nm)
- V.A.G 1590 Coolant pump wrench
- Drift
- Feeler gauges

Belt drive with single part injection pump sprocket

Belt drive with two-part injection pump sprocket =>Page 62

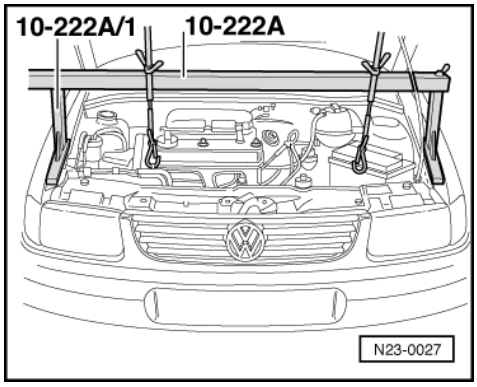

Protected by copyright. Copyright for private or commercial purposes, in part or in whole, is not permitted unless authorised by Volkswagen AG. Volkswagen AG does not guarantee or accept any liability with respect to the correctness of information in this document. Copyright by Volkswagen AG.
satelettronica

Removing

- -> Fit engine support bracket 10-222A with legs 10-222A/1.
- Locate support bracket in lifting eye on cylinder head and take-up weight of engine.
- Remove connecting hose for air cleaner/air intake connecting piece.
- Remove ribbed belt => Page 23 .
- Disconnect pendulum support at mounting.

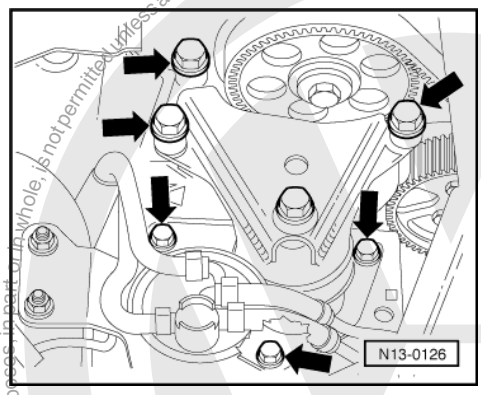

- Remove upper toothed belt guard and cylinder head cover.
- -> Remove bolts from engine mounting -arrows- and remove mounting complete.
- Remove engine mounting on cylinder block.

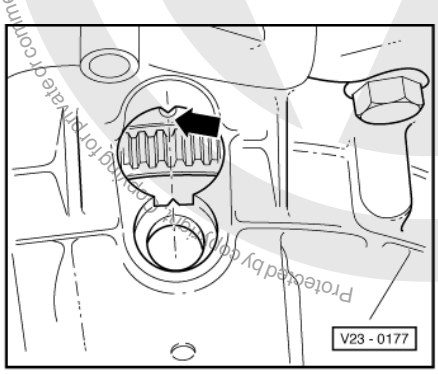

- -> Turn crankshaft to TDC No. 1 cylinder -arrow-.

Engine removed:

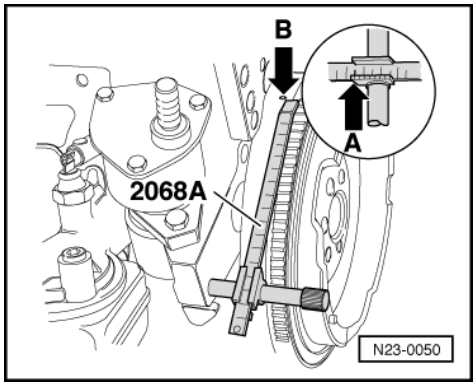

- -> Bolt on adjustment bar 2068 A as shown.
- Set bar to 13.0 mm. The left notch on the vernier scale -arrow A- is the reference point.
- Turn crankshaft until the flywheel TDC mark the point of the unit -arrow b- are aligned.

Protected by copyright. Copying for private or commercial purposes, in part or in whole, is not permitted unless authorised by Volkswagen AG. Volkswagen AG does not guarantee or accept any liability with respect to the correctness of information in this document. Copyright by Volkswagen AG.
satelettronica

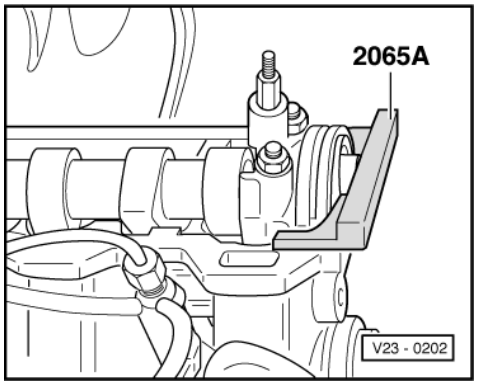

- -> Lock camshaft with setting bar 2065 A.
- Centralize setting bar as follows:
  Turn camshaft so that one end of setting bar contacts the cylinder head. Using feeler gauge establish the gap at the other end of the setting bar. Place a feeler gauge corresponding to half the gap between setting bar and cylinder head. Turn camshaft until the setting bar contacts the feeler gauge. Place a 2nd feeler gauge, of same thickness, at the other end between setting bar and cylinder head.

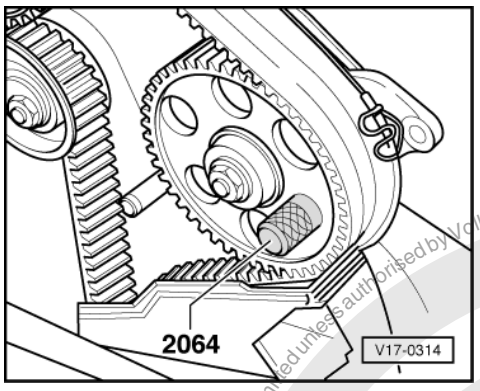

- -> Lock injection pump sprocket with mandrel 2064.
- Loosen tensioner.
- Carefully lower engine slightly.
- Remove coolant pump pulley (use water pump wrench V.A.G 1590 to loosen and tighten the securing bolt).
- Remove vibration damper and belt pulley.
- Remove ribbed belt tensioning roller.
- Remove lower toothed belt guard.
- Mark D.O.R. of toothed belt.
- Remove idler wheel.
- Take off toothed belt.

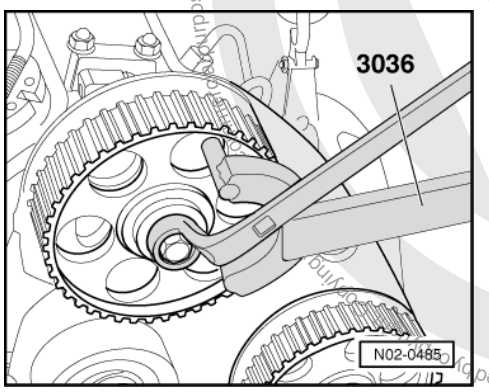

Installing

- Check whether TDC mark on flywheel and reference mark are aligned.

Protected by copyright. Copyright by Volkswagen AG. Volkswagen AG does not guarantee or accept any liability with respect to the correctness of information in this document. Copyright by Volkswagen AG. For personal and non-commercial use only. www.vwtechnicalinformation.com
satelettronica

- -> Loosen camshaft sprocket securing bolt one half turn, holding camshaft sprocket with counter-hold tool 3036.

Note:

Never use setting bar 2065 A as a counter hold when loosening and tightening the camshaft sprocket! Use counter-hold tool3036.

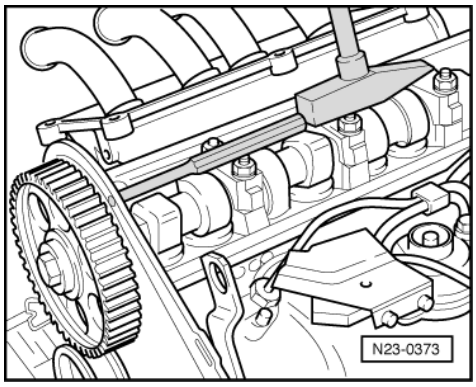

- -> Loosen camshaft sprocket from camshaft taper by tapping with hammer (using a drift through rear toothed belt guard opening).
- Fit toothed belt (note direction of rotation) and remove pin from injection pump sprocket.
- Install idler roller.
  Tightening torque: 25 Nm

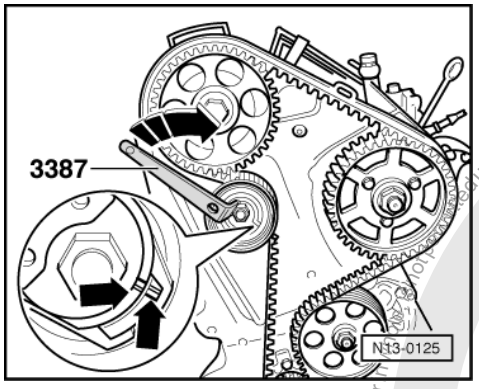

- -> Turn tensioning roller with pin wrench 3387 to right until notch aligns with raised portion -arrows-.

Note:

If the eccentric has been turned too far the tensioning roller must be relieved completely and retensioned. The eccentric must never be turned back when it has been turned too far.

- Tighten lock nut on tensioning roller.
  Tightening torque: 20 Nm
- Check again whether TDC mark on flywheel and reference mark are aligned.
- Tighten camshaft sprocket securing bolt to
  45 Nm.
- Remove setting bar 2065 A from camshaft and mandrel 2064 from injection pump sprocket.
- Turn crankshaft two rotations in engine D.O.R. until crankshaft is set to TDC No. 1 cylinder again.

- Check if
  the TDC mark on flywheel
  the setting bar on camshaft
  the mandrel 2064 in injection pump sprocket
  the tensioning roller setting (notch/raised mark)
  align/are fitted correctly.
- If notch and raised mark do not align, tension the tensioning roller. To do this, hold tensioning roller with pin wrench 3387, loosen securing nut, turn eccentric clockwise further until notch and raised mark align opposite one another and tighten securing nut to 20 Nm.
- Turn crankshaft two rotations in engine D.O.R. until crankshaft is set to TDC No. 1 cylinder again.

Protected by copyright. Copying for private or commercial purposes, in part or in whole, is not permitted unless authorised by Volkswagen AG. Volkswagen AG does not guarantee or accept any liability with respect to the correctness of information in this document. Copyright by Volkswagen AG.
satelettronica

- Repeat check.
- Install toothed belt guard, vibration damper (note fixing), V-belt pulley tensioning roller, coolant belt pulley and cylinder head cover.
- Fit engine mounting to cylinder block.
  Tightening torque: 45 Nm
- Install engine assembly mounting.
  Tightening torque => Page 9 .
- Install ribbed belt => Page 23 .
- Install noise insulation tray.
- Install connecting hose for air cleaner/air intake connecting piece.
- Install pendulum support free of tension.
  Tightening torque assembly mountings
  => Page 9 .
- Checking injection pump commencement of delivery:

=> Repair group 23; Servicing Diesel direct injection system; Dynamically checking and adjusting commencement of delivery Servicing Diesel direct injection system Dynamically checking and adjusting commencement of delivery

Belt drive with two part injection pump sprocket

Removing

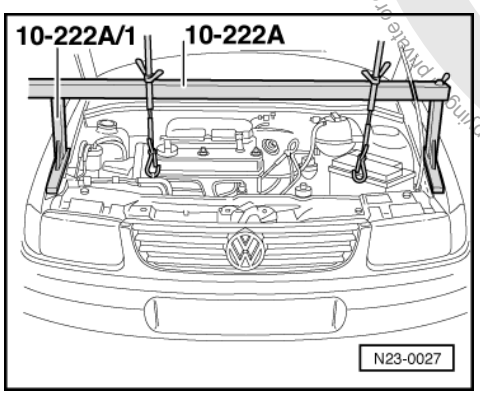

- -> Fit engine support bracket 10-222A with legs 10-222A/1.
- Locate support bracket in lifting eye on cylinder head and take-up weight of engine.
- Remove connecting hose for air cleaner/air intake connecting piece.
- Remove ribbed belt => Page 23 .
- Disconnect pendulum support at mounting.
- Remove upper toothed belt guard and cylinder head cover.

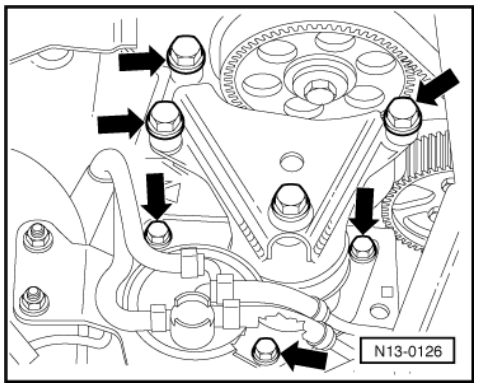

- -> Remove bolts from engine mounting -arrows- and remove mounting complete.
- Remove engine mounting on cylinder block.

Protected by copyright. Copying for private or commercial purposes, in part or in whole, is not permitted unless authorised by Volkswagen AG. Volkswagen AG does not guarantee or accept any liability with respect to the correctness of information in this document. Copyright by Volkswagen AG.
satelettronica

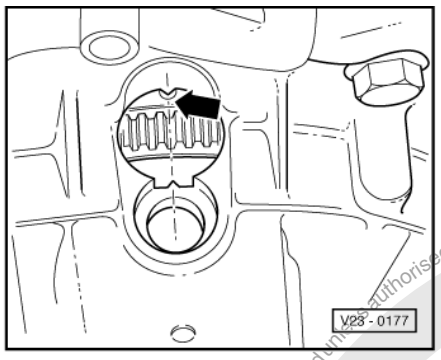

- -> Turn crankshaft to TDC No. 1 cylinder -arrow-.

Engine removed:

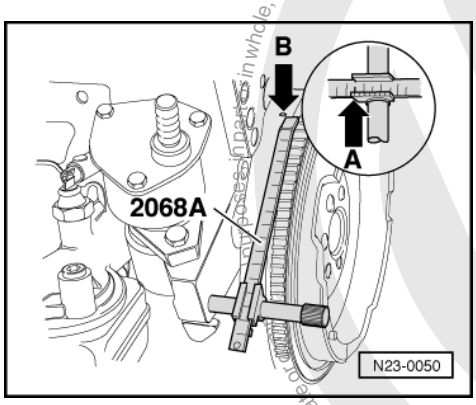

- -> Bolt on adjustment bar 2068 A as shown.
- Set bar to 13.0 mm. The left notch on the vernier scale -arrow A- is the reference point.
- Turn crankshaft until the flywheel TDC mark the point of the unit -arrow b- are aligned.

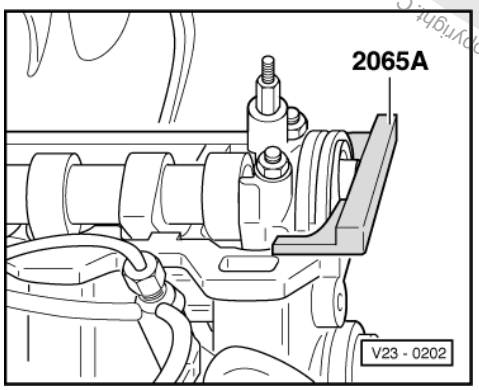

- -> Lock camshaft with setting bar 2065 A.
- Centralize setting bar as follows:
  Turn camshaft so that one end of setting bar contacts the cylinder head. Using feeler gauge establish the gap at the other end of the setting bar. Place a feeler gauge corresponding to half the gap between setting bar and cylinder head. Turn camshaft until the setting bar contacts the feeler gauge. Place a 2nd feeler gauge, of same thickness, at the other end between setting bar and cylinder head.

Copyright by Volkswagen AG. Volkswagen AG does not guarantee or accept any liability with respect to the correctness of information in this document. Copyright by Volkswagen AG. Protected by copyright. Copying, in part or in whole, is not permitted unless authorised by Volkswagen AG.
satelettronica

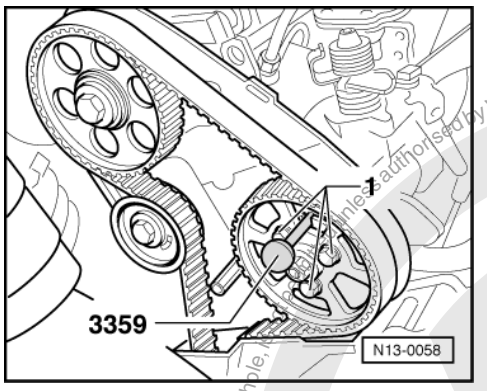

- -> Lock injection pump sprocket with pin 3359.
- Loosen injection pump sprocket securing bolts -1-.
- Loosen tensioner.
- Carefully lower engine slightly.
- Remove coolant pump pulley (use water pump wrench V.A.G 1590 to loosen and tighten the securing bolt).
- Remove vibration damper/belt pulley.
- Remove ribbed belt tensioning roller.
- Remove lower toothed belt guard.
- Mark D.O.R. of toothed belt.
- Take off toothed belt.

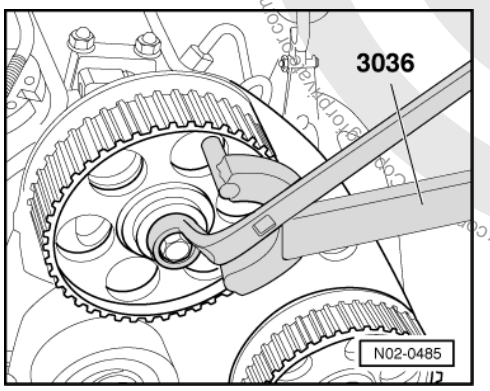

Installing

- Check whether TDC mark on flywheel and reference mark are aligned.
- -> Loosen camshaft sprocket securing bolt one half turn, holding camshaft sprocket with counter-hold tool 3036.

Note:

Never use setting bar 2065 A as a counter hold when loosening and tightening the camshaft sprocket! Use counter-hold tool3036.

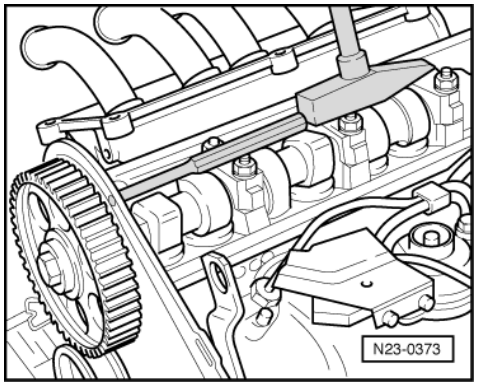

Protected by copyright. Copyright by Volkswagen AG. Volkswagen AG does not guarantee or accept any liability with respect to the correctness of information in this document. Copyright by Volkswagen AG.
satelettronica

- -> Loosen camshaft sprocket from camshaft taper by tapping with hammer (using a drift through rear toothed belt guard opening).
- Fit toothed belts (note D.O.R.) on crankshaft toothed belt sprocket, intermediate wheel, injection pump sprocket and tensioning roller.
- Fit camshaft sprocket together with toothed belt and locate with securing bolt (camshaft sprocket can still turn).

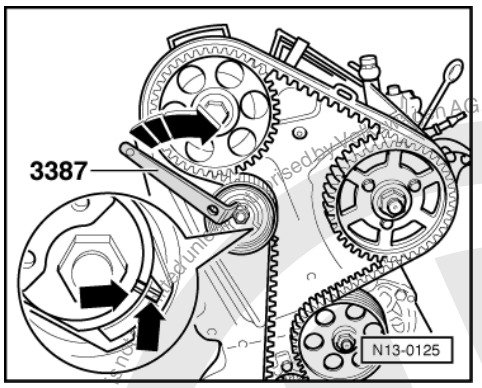

- -> Turn tensioning roller with pin wrench 3387 to right until notch aligns with raised portion -arrows-.

Note:

If the eccentric has been turned too far the tensioning roller must be relieved completely and retensioned. The eccentric must never be turned back when it has been turned too far.

- Tighten lock nut on tensioning roller.
  Tightening torque: 20 Nm
- Check again whether TDC mark on flywheel and reference mark are aligned.
- Tighten camshaft sprocket securing bolt to
  45 Nm.
- Tighten injection pump sprocket securing bolts to
  25 Nm.
- Remove setting bar 2065 A from camshaft and pin 3359 from injection pump sprocket.
- Turn crankshaft two rotations in engine D.O.R. until crankshaft is set to TDC No. 1 cylinder again.
- Check if
  the TDC marking on flywheel
  the setting bar on camshaft
  the pin 3359 in injection pump sprocket
  the tensioning roller setting (notch/raised mark)
  align/are fitted correctly.
- If notch and raised mark do not align, tension the tensioning roller. To do this, hold tensioning roller with pin wrench 3387, loosen securing nut, turn eccentric clockwise further until notch and raised mark align opposite one another and tighten securing nut to 20 Nm.

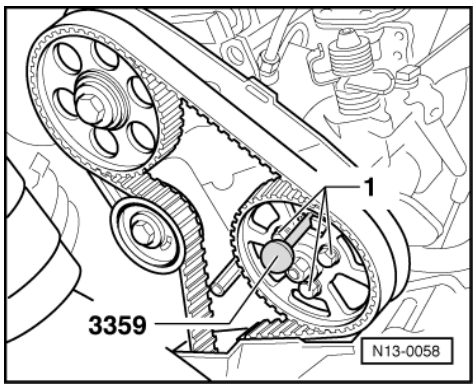

-> If the injection pump sprocket cannot be locked with pin 3359:

- Loosen injection pump securing bolts -1-.
- Turn injection pump sprocket hub until the pin fits.
- Tighten injection pump sprocket securing bolts to

Copyright by Volkswagen AG. Volkswagen AG does not guarantee or accept any liability with respect to the correctness of information in this document. Copyright by Volkswagen AG.
satelettronica

25 Nm.

- Turn crankshaft two rotations in engine D.O.R. until crankshaft is set to TDC No. 1 cylinder again.
- Repeat check.
- Install toothed belt guard, vibration damper (note fixing), V-belt pulley tensioning roller, coolant belt pulley and cylinder head cover.
- Fit engine mounting to cylinder block.
  Tightening torque: 45 Nm
- Install engine assembly mounting.
  Tightening torque => Page 9 .
- Install ribbed belt => Page 23 .
- Install noise insulation tray.
- Install connecting hose for air cleaner/air intake connecting piece.
- Install pendulum support free of tension.
  Tightening torque assembly mountings
  => Page 9 .
- Check injection pump commencement of delivery:

=> Repair group 23; Servicing fuel injection system; Checking commencement of injection and adjusting if necessary Servicing fuel injection system Checking commencement of injection and adjusting if necessary

Protected by copyright. Copying for private or commercial purposes, in any form and by any means, is prohibited unless authorised by Volkswagen AG. Volkswagen AG does not guarantee or accept any liability with respect to the correctness of information in this document. Copyright by Volkswagen AG.

satelettronica

1.4 - Removing and installing cylinder head

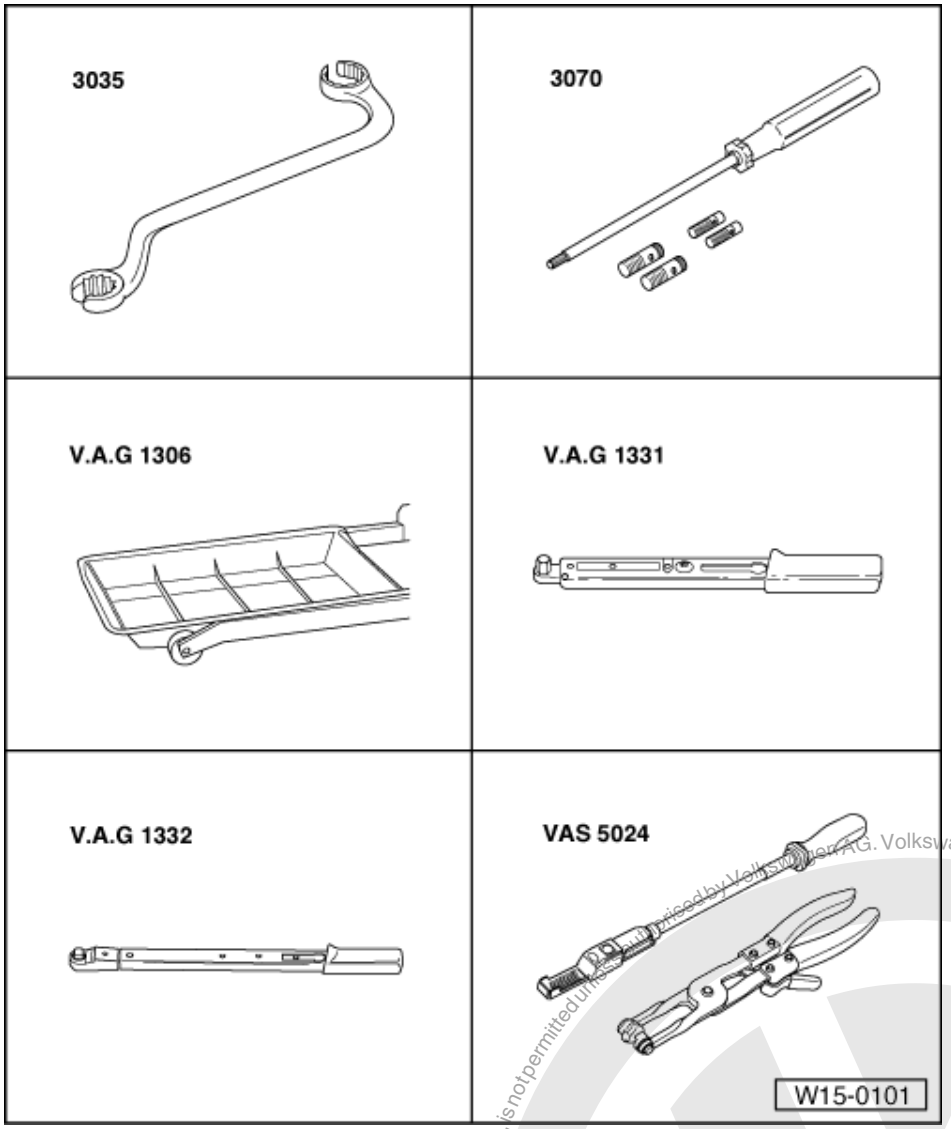

Special tools, workshop equipment, test and measuring appliances and auxiliary items required

- 3035 Open ring spanner
- 3070 Fitting tool with guide pins
- V.A.G 1306 Drip tray
- V.A.G 1331 Torque wrench (5...50 Nm)
- V.A.G 1332 Torque wrench (40...200 Nm)
- VAS 5024 Assembly tool for spring-type clamps

Prerequisites

- The engine must be no more than warm to touch.
- No piston must be at TDC.

Removing

- Remove engine cover.

satelettronica
Protected by copyright. Copying for private or commercial purposes, in part or in whole, is not permitted unless authorised by Volkswagen AG. Volkswagen AG does not guarantee or accept any liability with respect to the correctness of information in this document. Copyright by Volkswagen AG.

Note:

Check whether a coded radio is installed as during the forthcoming work sequences the battery earth strap must be disconnected. Obtain radio code first if necessary.

- With the ignition switched off disconnect battery earth strap.
- All cable ties which are opened or cut open when removing engine, must be replaced in the same position when installing engine.
- Remove air cleaner/intake pipes cover connecting hose.
- Remove intake manifold cover => Page 55 , Removing and installing intake manifold.
- Remove noise insulation tray.
- Drain coolant => Page 115 .
- Remove coolant hoses at cylinder head with assembly tool for spring-type clamps VAS 5024.
- Separate front exhaust pipe from exhaust manifold => Page 151 , exhaust manifold, front exhaust pipe and catalyst with attachments.
- Remove ribbed belt => Page 23 .
- Pull vacuum hoses/pipes off cylinder head and lay to one side.
- Pull glow plug connectors off glow plugs.
- Pull off/disconnect all other electrical connections as necessary from engine and lay to one side.
- Remove injector pipe set.

Notes:

- To remove injector pipe set, use open ring spanner 3035.
- Always remove complete pipe set.
- To not alter the shapes of the bends.

- Cover openings with a clean cloth.
- Remove upper toothed belt guard and cylinder head cover.
- Remove toothed belt from camshaft sprocket and remove cam sprocket => Page 57 , Removing, installing and tensioning toothed belt.
- Turn back crankshaft slightly
- Remove toothed belt tensioning roller.
- Remove rear toothed belt guard securing bolts at cylinder head.

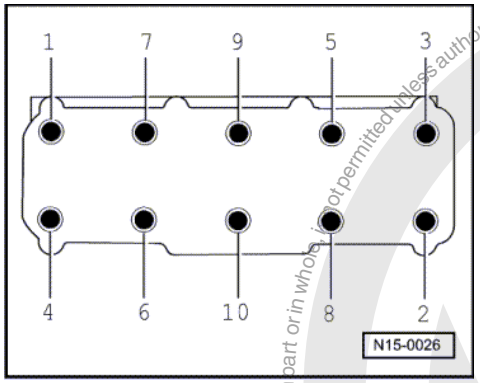

- -> Loosen socket head bolts in the sequence given and then remove completely.
- Carefully lift cylinder head off.

Installing

Notes:

- Always renew cylinder head bolts.
- In cases of repair carefully remove seal/gasket remains from cylinder head and cylinder block. Ensure that no scratches are created. When using abrasive paper do not use a grade less than 100.
- Carefully remove emery and abrasive remains.
- Remove new cylinder head gasket from packaging, just before installation.
- Handle gasket extremely carefully. Damage to the seam area will lead to leaks.

- Place a clean cloth in cylinders so that no dirt or emery cloth particles can get in between cylinder wall and piston.
- Also prevent dirt and emery cloth particles from getting into the coolant.
- Carefully remove metal particles, emery remains and cloths.

satelettronica

- Turn crankshaft to TDC marking before fitting cylinder head.
- Turn crankshaft against engine direction of rotation until all pistons are approximately equally placed below TDC.

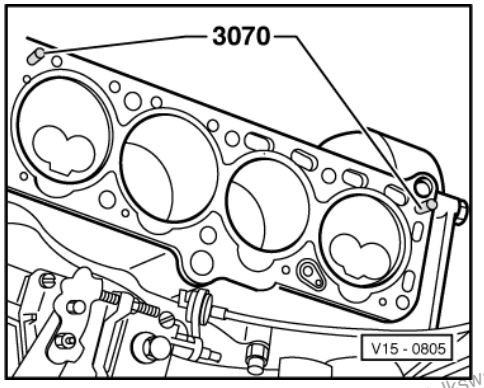

- Place cylinder head gasket on.
- -> To centralize, screw guide pins from 3070 into the outer threaded holes on the intake side.
- Fit cylinder head, screw in 8 remaining cylinder head bolts and tighten by hand.
- Remove guide pins with removal tool from 3070 and install cylinder head bolts.

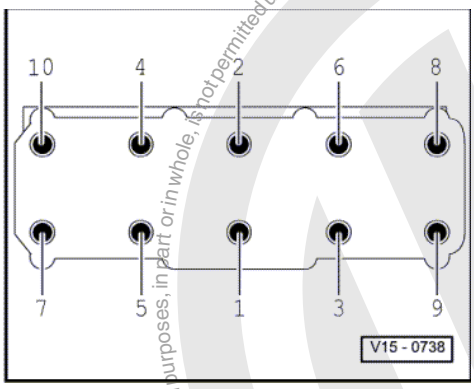

- -> Tighten cylinder head in four stages in sequence shown as follows:
- 1. Tighten initially with torque wrench:
  Stage I = 40 Nm
  Stage II = 60 Nm
- 2. Turn further with normal spanner:
  Stage III = 1/4 turn (90 °)
  Stage IV = 1/4 turn (90 °)

Note:

Retightening the cylinder head bolts after repairs is not required.

The rest of the assembly is basically a reverse of the dismantling sequence.

- After tightening cylinder head, turn camshaft so that the cams for No. 1 cylinder point evenly upwards. Before fitting toothed belt, turn crankshaft in engine D.O.R. to TDC.
- Fit crankshaft sprocket together with toothed belt and attach with securing bolt (sprocket may still be rotated).

Installing toothed belt and adjusting timing => Page 57 , Removing, installing and tensioning toothed belt.

Filling with new coolant => Page 115 .

- Carry out a test drive and interrogate fault memory:

=> Repair group 01; Self-diagnosis; Interrogating fault memory Self-diagnosis Interrogating fault memory

Protected by copyright. Copyright by Volkswagen AG. Volkswagen AG does not guarantee or accept any liability with respect to the correctness of information in this document. Copyright by Volkswagen AG. Protected by copyright. Copying for private or commercial purposes, in part or in whole, is not permitted unless authorised by Volkswagen AG.
satelettronica

1.5 - Checking compression pressures

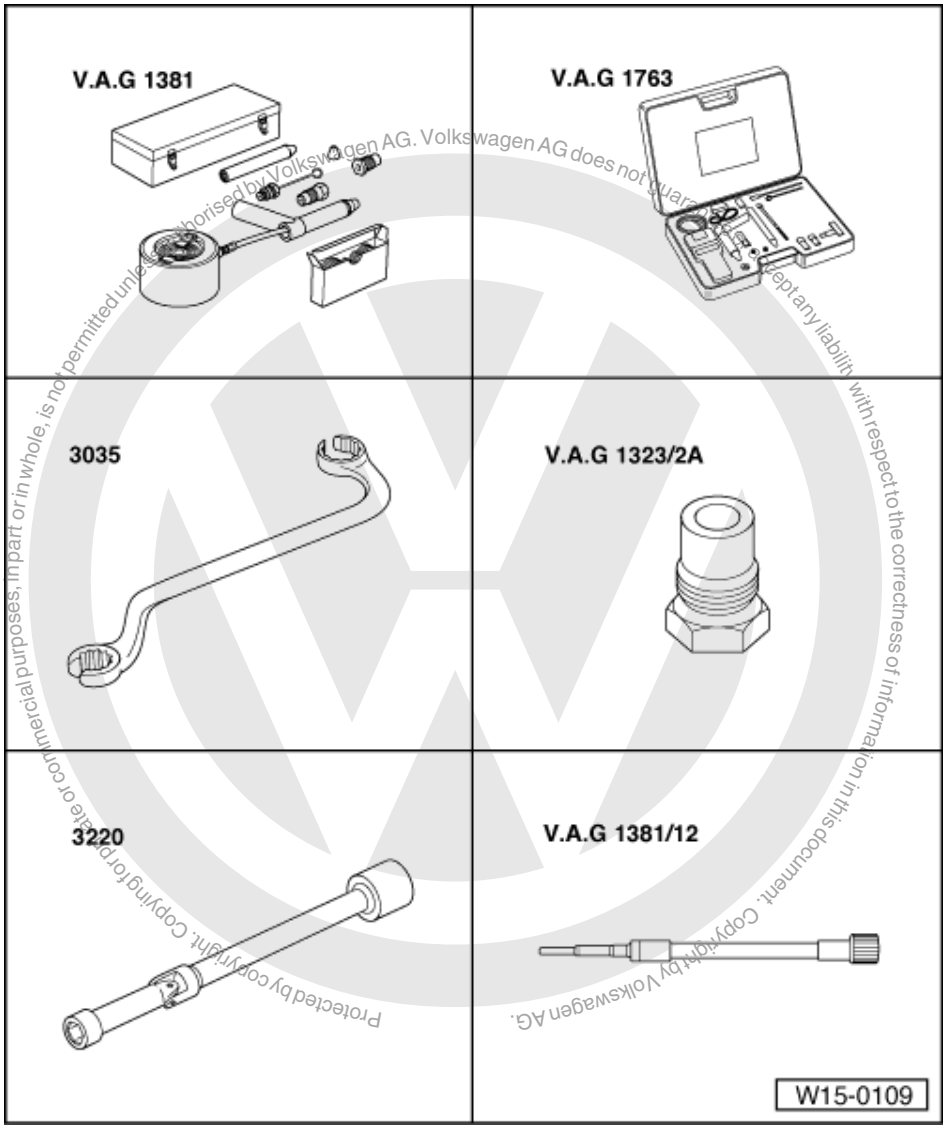

Protected by copyright. Copying for private or commercial purposes, in part or in whole, is not permitted unless authorised by Volkswagen AG. Volkswagen AG does not guarantee or accept any liability with respect to the correctness of information in this document. Copyright by Volkswagen AG.

satelettronica

Special tools, workshop equipment, test and measuring appliances and auxiliary items required

- V.A.G 1381 or V.A.G 1763 Compression tester
- V.A.G 1331 Torque wrench (5...50 Nm)

Engine code AEF

- 3035 Open ring spanner
- V.A.G 1323/2A Adapter
- V.A.G 1332 Torque wrench (40...200 Nm)

Engine codes AGD, AHG, AKU, ASX

- 3220 Joint spanner
- V.A.G 1381/12 Adapter

Test conditions

- Engine oil temperature min. 30 °C.

Test sequence

Engine code AEF

Test procedure for engine codes ACD, AHG, AKU, ASX =>Page 72 .

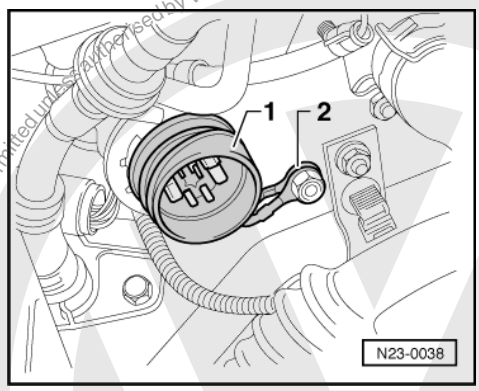

- -> Separate multi-pin connector -1-.
- Remove injection pipes with slotted ring spanner 3035.

Notes:

- To remove injector pipe set, use open ring spanner 3035.
- Always remove complete pipe set.
- To not alter the shapes of the bends.

Unscrew all injectors and take out heat shields.

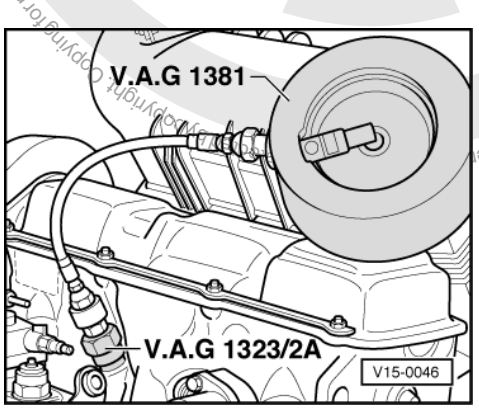

- -> Screw in adapter V.A.G 1323/2A in place of the injectors.
  Insert old heat shield between adapter and cylinder head.
- Screw compression pressure recorder V.A.G 1381 or V.A.G 1763 into the adapter by hand.

Note:

Using the compression tester => Operating instructions.

- Operate starter until tester shows no further pressure increase.

Compression pressure:

New: 34 bar
Wear limit: 26 bar

satelettronica

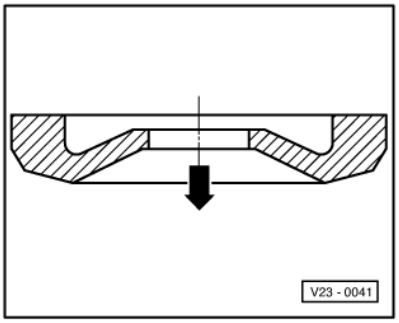

Permissible difference between all cylinders: 5 bar

Note:

Always renew heat shield seals between cylinder head and injectors.

-> Installation position of heat shield:
Arrow points towards cylinder head.

- Tightening torques:
  Injector pipes = 25 Nm
  Injectors = 70 Nm

Interrogate fault memory:

=> Repair group 01; Self-diagnosis; Interrogating fault memory Self-diagnosis Interrogating fault memory

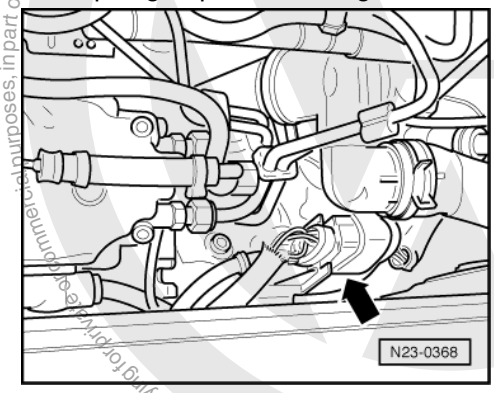

Note:

Faults will have been stored because the connector to injection pump has been separated. Therefore interrogate and erase fault memory.

Engine codes AGD, AHG, AKU, ASX

- Pull off or unscrew fuel cut-off valve connector at injection pump.
- -> Separate connection to metering unit of injection pump -arrow-.
- Remove all glow plugs using socket spanner 3220.

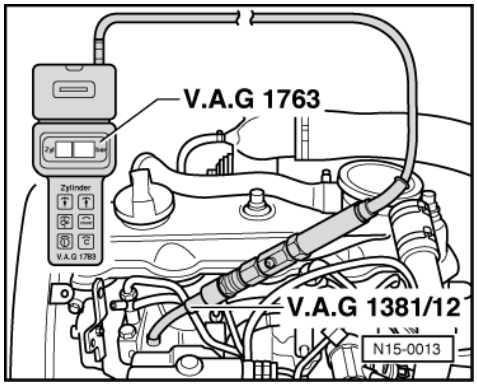

Volkswagen AG. Volkswagen AG does not guarantee or accept any liability with respect to the correctness of information in this document. Copying by Volkswagen AG. Reproduction authorised only for non-commercial purposes, in part or in whole, is not permitted without the express authorised by Volkswagen AG. Copying for commercial purposes, in part or in whole, is not permitted without the express authorised by Volkswagen AG.

satelettronica

- -> Screw in adapter V.A.G 1381/12 in place of the glow plugs.
- Check compressions with compression tester V.A.G 1381 or V.A.G 1763.

Note:

Using the compression tester => Operating instructions.

- Operate starter until tester shows no further pressure increase.

Compression pressure:

New: 25...31 bar
Wear limit: 19 bar

Permissible difference between all cylinders: 5 bar

- Install glow plugs with socket and jointed extension 3220
  Tightening torque: 15 Nm.
- Interrogate fault memory:

=> Repair group 01; Self-diagnosis; Interrogating fault memory Self-diagnosis Interrogating fault memory

Note:

Faults will have been stored because the connector to injection pump has been separated. Therefore interrogate and erase fault memory.

Protected by copyright. Copying for private or commercial purposes, in part or in whole, is not permitted unless authorised by Volkswagen AG. Volkswagen AG does not guarantee or accept any liability with respect to the correctness of information in this document. Copyright by Volkswagen AG.
satelettronica

2 - Servicing valve gear

2.1 - Servicing valve gear

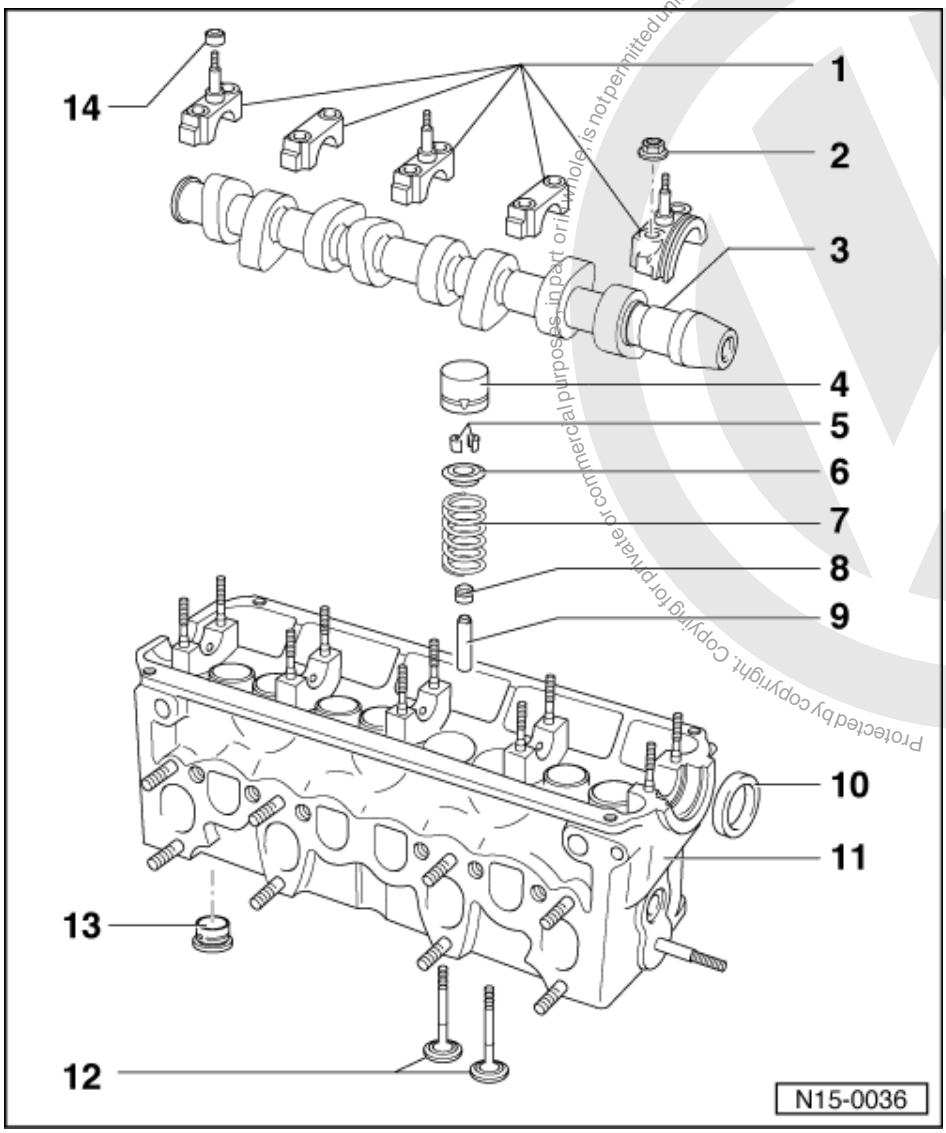

Note:

Cylinder heads with cracks between the valve seats may be used without reducing engine life, provided the cracks are small and not more than 0.5 mm wide.

1 Bearing cap
- Installation position => Fig. 2
- Note sequence when loosening and tightening
  => Page 88 , Removing and installing camshaft
- Lightly coat contact surface of ends of bearing cap -1- with sealant AMV 174 004 01

2 20 Nm

Protected by copyright. Copying for private or commercial purposes, in part or in whole, is not permitted unless authorised by Volkswagen AG. Volkswagen AG does not guarantee or accept any liability with respect to the correctness of information in this document. Copyright by Volkswagen AG.
satelettronica

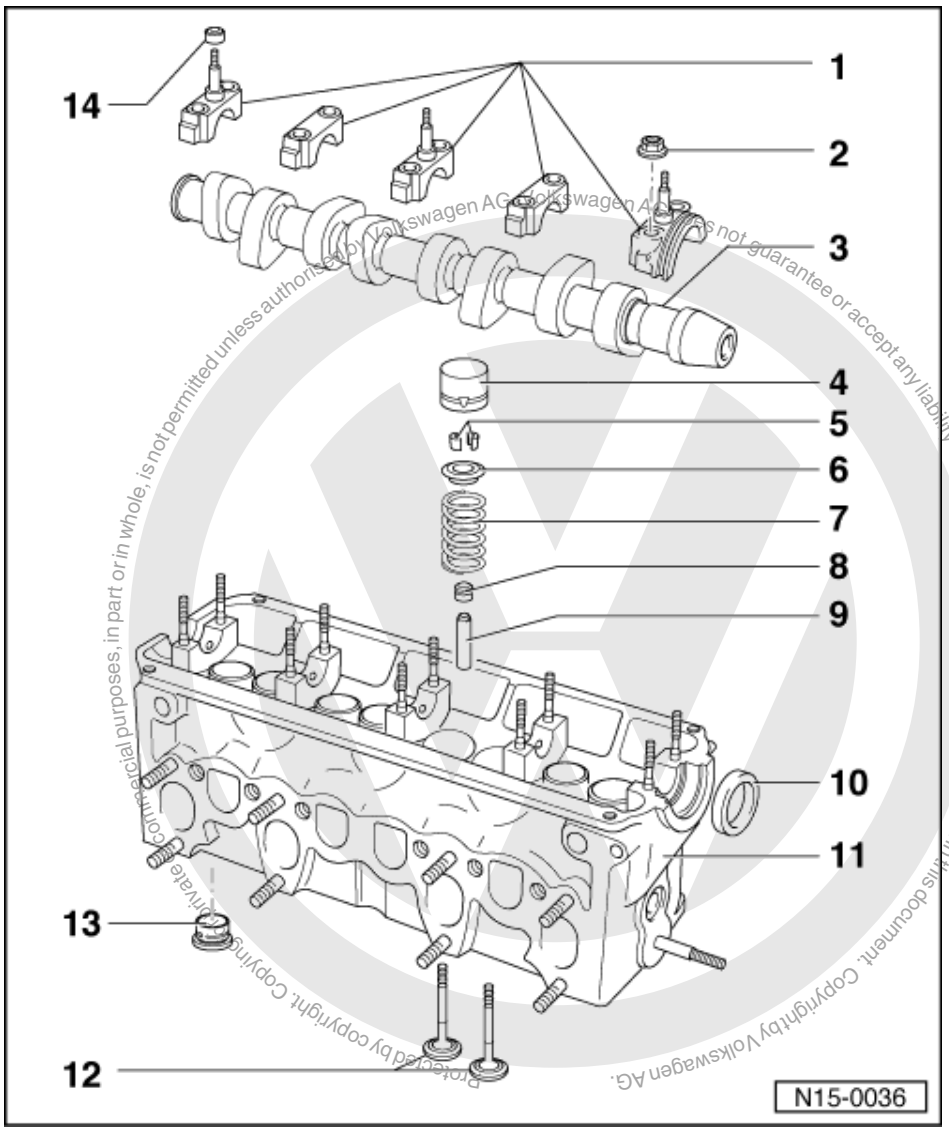

Protected by copyright. Copying for private or commercial purposes, in part or in whole, is not permitted unless authorised by Volkswagen AG. Volkswagen AG does not guarantee or accept any liability with respect to the correctness of information in this document. Copyright by Volkswagen AG.

3 Camshaft

- Checking axial clearance => Fig. 1
- Removing and installing
  => Page 88
- Checking radial clearance with plastigage
  Wear limit: 0.11 mm
- Run-out: max. 0.01 mm
- Identification and valve timing
  => Fig. 4

4 Bucket tappet

- Before installing check camshaft axial clearance => Fig. 1
- Checking => Page 90
- Do not interchange
- With hydraulic valve clearance compensation
- Store with cam lobe contact surface downwards
- Oil contact surface

satelettronica

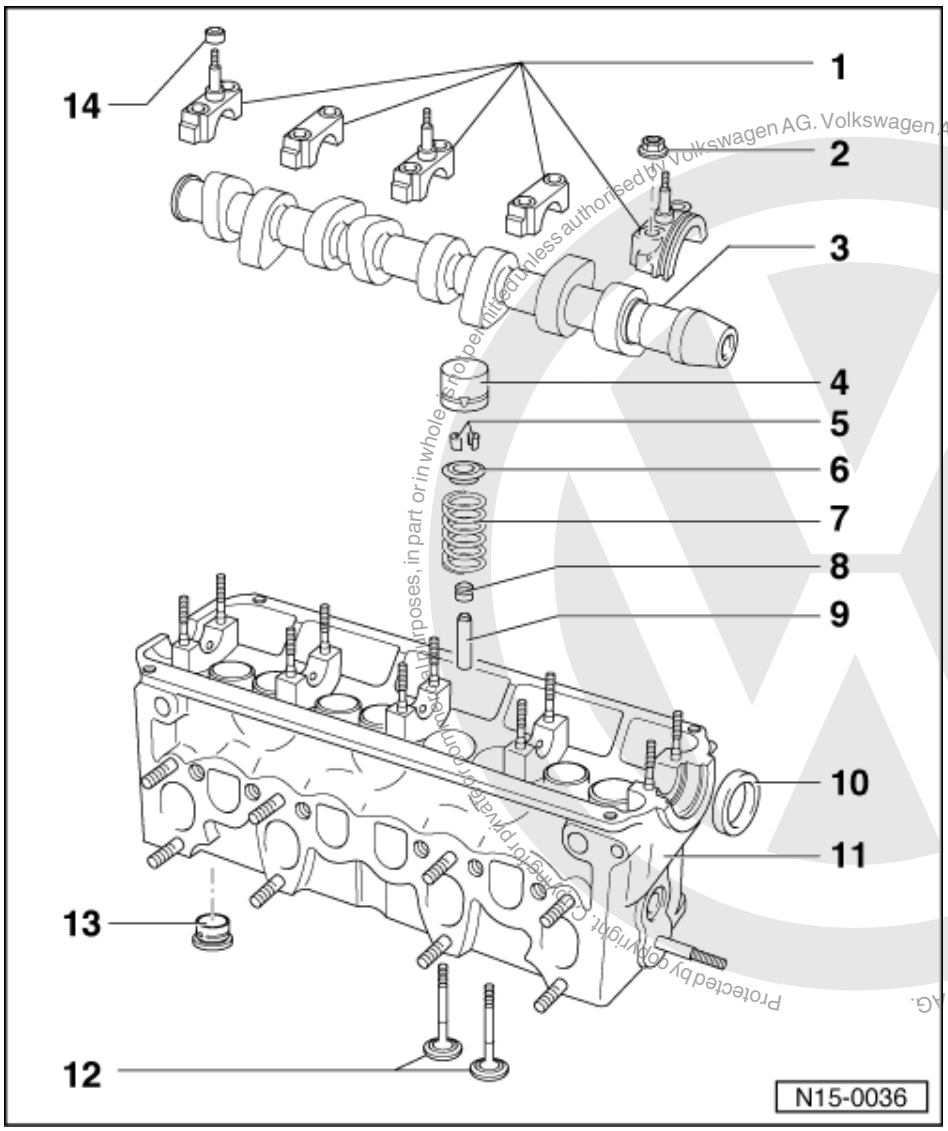

5 Cotters
6 Upper valve spring plate
7 Valve spring
- Removing and installing:
  Cylinder head
  removed: with 2037
  installed: => Page 86 , Renewing valve stem seals

8 Valve stem seal
- Renewing=> Page 86

9 Valve guide
- Checking => Page 82
- Renewing => Page 84
- Service version with collar

10 Oil seal
- To remove and install, remove bearing cap
- Removing, installing and tensioning toothed belt=> Page 57

Protected by copyright. Copyright by Volkswagen AG. Volkswagen AG does not guarantee or accept any liability with respect to the correctness of information in this document. Copyright by Volkswagen AG.
satelettronica

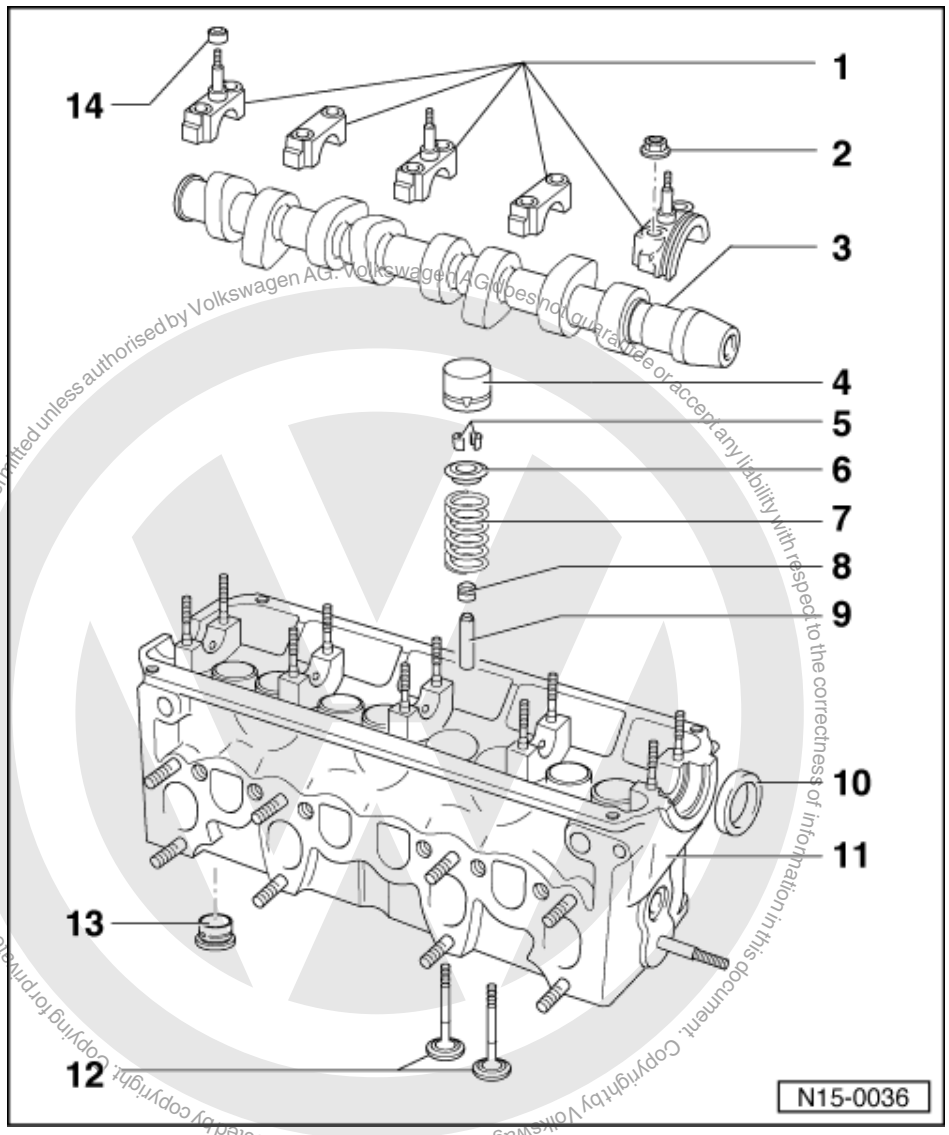

Protected by copyright. Copyright for private or commercial purposes, in part or in whole, is not permitted unless authorised by Volkswagen AG. Volkswagen AG does not guarantee or accept any liability with respect to the correctness of information in this document. Copyright by Volkswagen AG.

11 Cylinder head

- See note
  => Page 74
- Reworking valve seats
  => Page 80

12 Valves

- Valve dimensions => Fig. 3
- Do not rework only grinding-in is permitted

13 Swirl chamber

- Only engine code AEF
- Renew if damaged
- Renewing => Page 91

14 Lower sealing cone

- Renew if damaged
- Note fitting position

satelettronica

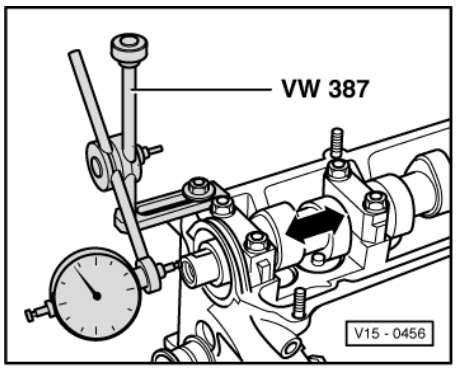

-> Fig. 1 Checking camshaft axial clearance

Special tools, workshop equipment, testers, measuring instruments and auxiliary items required

- VW 387 Universal dial gauge bracket
- Dial gauge

Check with bucket tappets removed and with first and last bearing caps fitted.

Wear limit: max. 0.15 mm

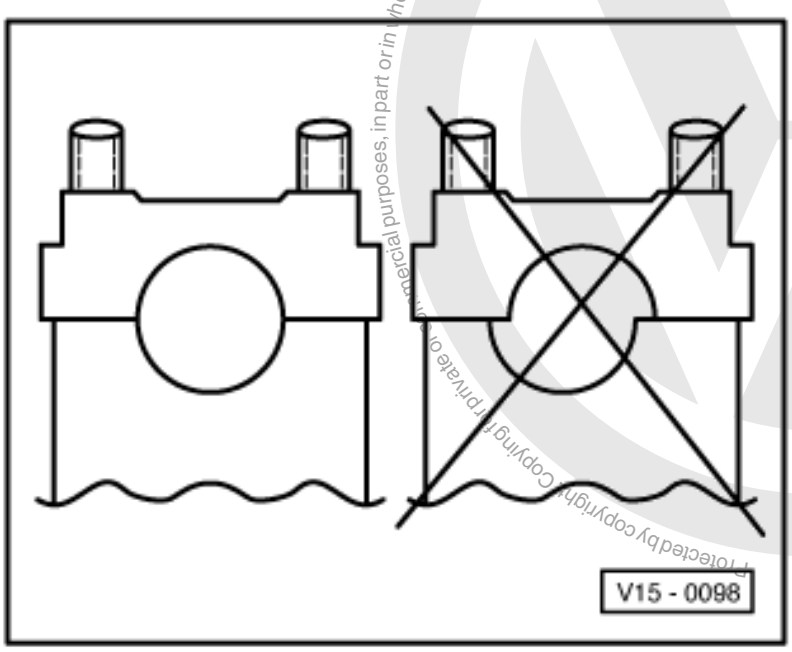

-> Fig. 2 Fitting position of camshaft bearing caps

Note offset. Before installing camshaft fit bearing caps and determine fitting position.

Protected by copyright. Copying for private or commercial purposes, in part or in whole, is not permitted unless authorised by Volkswagen AG. Volkswagen AG does not guarantee or accept any liability with respect to the correctness of information in this document. Copyright by Volkswagen AG.
satelettronica

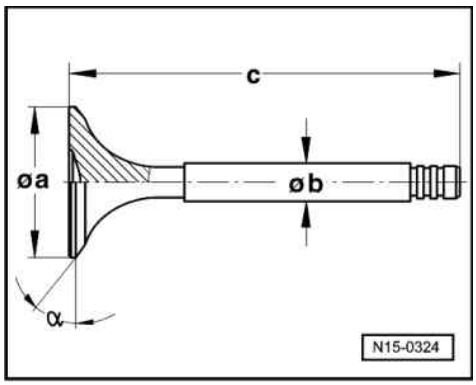

-> Fig. 3 Valve dimensions

Note:

Valves must not be reworked. Only lapping-in is permitted.

Engine code AEF

Dimension		Inlet valve	Exhaust valve
øa	mm	36.0	31.0
øb	mm	7.97	7.95
c	mm	95.0	95.0
α	<°	45	45

Engine codes AGD, AHG, AKU, ASX

Dimension		Inlet valve	Exhaust valve
øa	mm	35.95	31.45
øb	mm	6.97	6.95
c	mm	96.35	96.35
α	<°	45	45

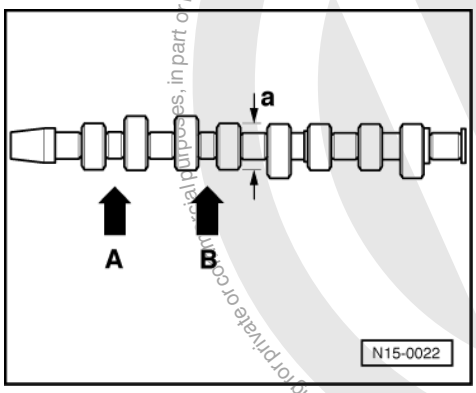

-> Fig.4 Camshaft identification, valve timing

Identification

- Cam base diameter: a = 38 mm ø

Protected by copyright. Copying for private or commercial purposes, in part or in whole, is not permitted unless authorised by Volkswagen AG. Volkswagen AG does not guarantee or accept any liability with respect to the correctness of information in this document. Copyright by Volkswagen AG.
satelettronica

- Identification by stamped numbers and letters between inlet and exhaust cams:

Engine code	AEF	AGD	AHG	AKU	ASX
Cylinder 1 -arrow A-	W	W	W	W	W
Cylinder 2 -arrow B-	028 G	028 E or H	028 E or H	028 H	028 E or H

Valve timing at 1 mm valve lift

Engine code	AEF	AGD	AHG	AKU	ASX
Inlet opens after TDC	6°	11°	11°	11°	11°
Inlet closes after BDC	20°	25°	25°	25°	25°
Exhaust opens before BDC	26°	40°	40°	40°	40°
Exhaust closes before TDC	7°	10°	10°	10°	10°

2.2 - Reworking valve seats

Special tools, workshop equipment, testers, measuring instruments and auxiliary items required

- Depth gauge
- Valve seat refacing tool

Notes:

- When repairing engines with leaking valves, it is not always sufficient to reface or renew valve seats and valves. It is also necessary to check the valve guides for wear. This is particularly important on high mileage engines.
- The valve seats should only be reworked just enough to produce a perfect seating pattern. The maximum permissible reworking dimension must be calculated before work is carried out. If the reworking dimension is exceeded, the function of the hydraulic tappets can no longer be guaranteed and therefore the cylinder head should be renewed.

Work sequence

The max. permissible reworking dimension is calculated as follows:

- Insert valve and press firmly against seat.

Note:

If the valve is to be renewed as part of a repair, use a new valve for the calculation.

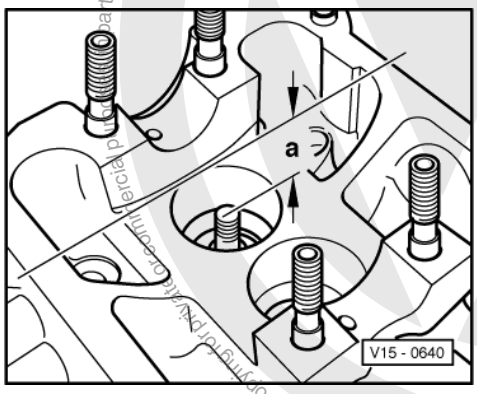

Protected by copyright. Copyright by Volkswagen AG.
satelettronica

- -> Measure distance -a- between end of valve stem and upper edge of cylinder head.
- Calculate max. permissible reworking dimension from measured distance -a- and minimum dimension.

Minimum dimension:
Inlet valve 35.8 mm
Exhaust valve 36.1 mm

Measured distance minus minimum dimension
= max. permissible reworking dimension.

Example:

-	Measured distance	36.5	mm
	Minimum dimension	35.8	mm
=	max. perm. rework dimension	0.7	mm

Engine codes AGD, AHG, AKU, ASX

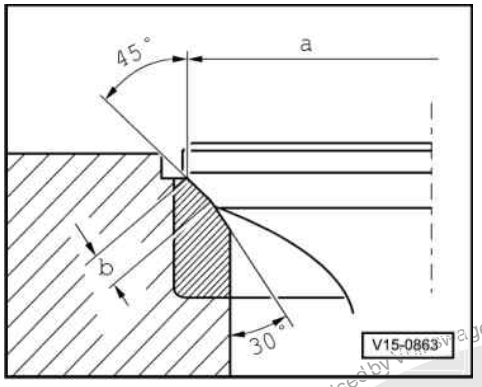

-> Reworking inlet valve seat

a	= 35.7 mm ø
b	= 1.6 mm
45 °	= Valve seat angle

Note:

The 30 ° lower valve seat chamfer is necessary to ensure that the inlet channel flow characteristics are maintained.

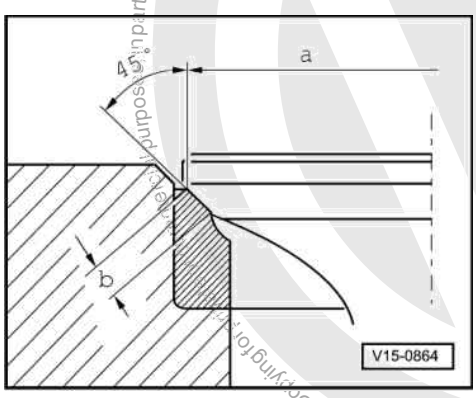

-> Reworking exhaust valve seat

a	= 31.4 mm ø
b	= 2.7 mm
45 °	= Valve seat angle

Protected by copyright. Copyright by Volkswagen AG. Volkswagen AG does not guarantee or accept any liability with respect to the correctness of information in this document. Copying for private or commercial purposes, in part or in whole, is not permitted unless authorised by Volkswagen AG.
satelettronica

Engine code AEF

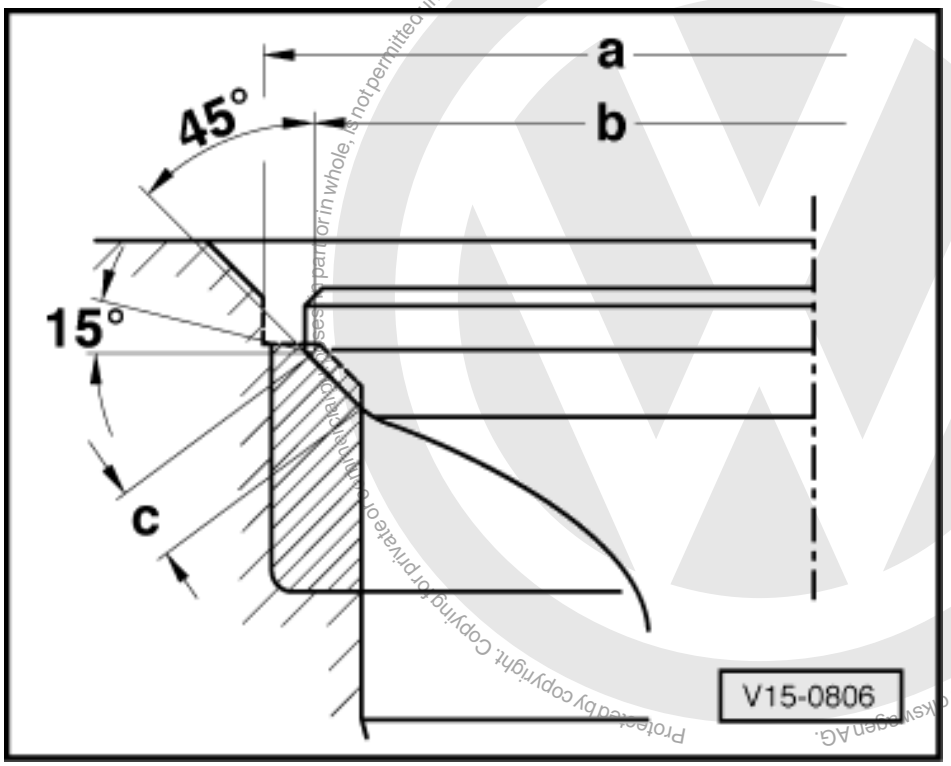

-> Reworking valve seats

Dimen.		In. valve seats	Ex. valve seats
øa	mm	37.201)	33.201)
øb	mm	34.80	30.40
c	mm	2.70	2.05
45°		Valve seat angle	
15°		Correction angle	

1) max. external diameter of correction cutter

2.3 - Checking valve guides

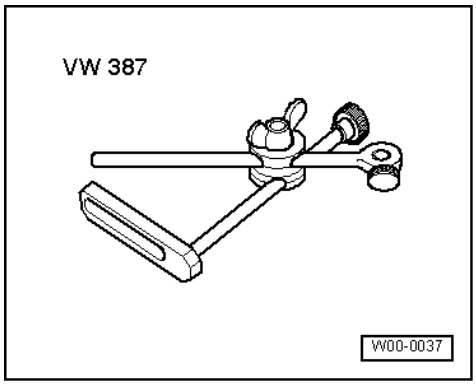

Special tools, workshop equipment, testers, measuring instruments and auxiliary items required

- VW 387 Universal dial gauge bracket

Protected by copyright. Copying for private or commercial purposes, in part or in whole, is not permitted unless authorised by Volkswagen AG. Volkswagen AG does not guarantee or accept any liability with respect to the correctness of information in this document. Copyright by Volkswagen AG.
satelettronica

- Dial gauge

Test sequence

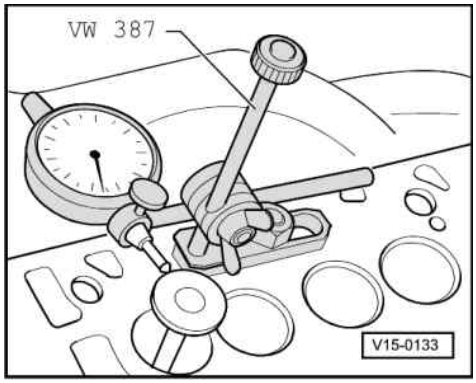

- -> Insert new valve into guide until end of valve stem is flush with end of guide. Due to the slight difference in stem dimensions, ensure that only an inlet valve is used in the inlet guide and an exhaust valve in the exhaust guide.
- Determine rock.
  Wear limit: 1.3 mm

If rock tolerance is exceeded:

- Renew valve guides => Page 84

Protected by copyright. Copying for private or commercial purposes, in part or in whole, is not permitted unless authorised by Volkswagen AG. Volkswagen AG does not guarantee or accept any liability with respect to the correctness of information in this document. Copyright by Volkswagen AG.
satelettronica

2.4 - Renewing valve guides

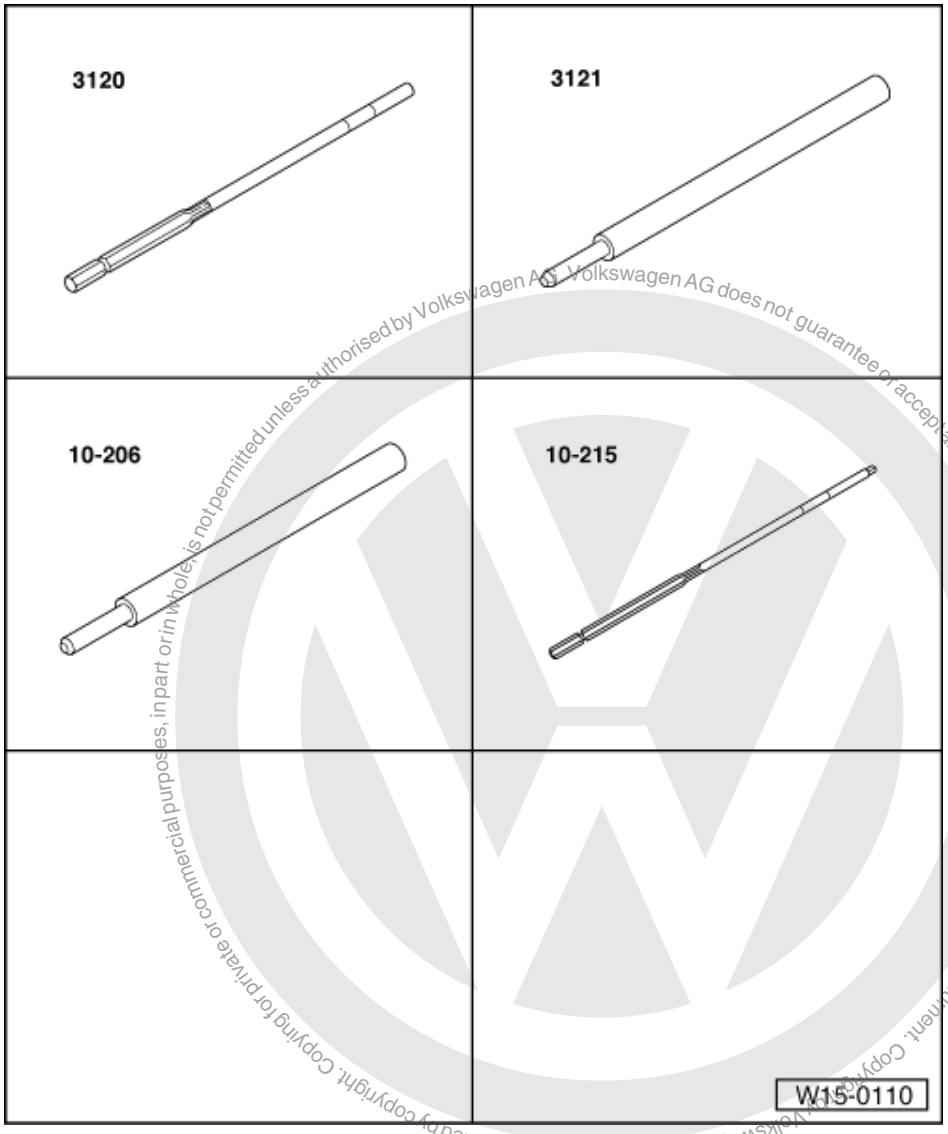

Protected by copyright. Copying for private or commercial purposes, in part or in whole, is not permitted unless authorised by Volkswagen AG. Volkswagen AG does not guarantee or accept any liability with respect to the correctness of information in this document. Copyright by Volkswagen AG.

satelettronica

Special tools, workshop equipment, test and measuring appliances and auxiliary items required

- Drilling fluid

Valve stem ø 7 mm:

- 3120 Reamer
- 3121 Drift

Valve stem ø 8 mm:

- 10-206 Drift
- 10-215 Reamer

Removing

- Clean and check cylinder head. Cylinder heads in which the valve seats can no longer be reworked, or cylinder heads which have already been machined to the minimum dimension, should not have the valve guides replaced.
- Press worn valve guides out with
  Valve stem ø 8 mm: 10-206
  Valve stem ø 7 mm: 3121

from the camshaft side. (Press valve guides with collar -service version- from the combustion chamber side.)

Installing

- Coat new guides with oil and press in with 10-206/3121 from the camshaft side with head cold until shoulder makes contact.

Note:

When the shoulder on guide makes contact, the pressure must not exceed 1.0 t otherwise shoulder may break off.

- Ream guides out with hand reamer
  Valve stem ø 8 mm: 10-215
  Valve stem ø 7 mm: 3120
  using plenty of cutting fluid.
- Rework valve seats => Page 80 .

2.5 - Renewing valve stem seals

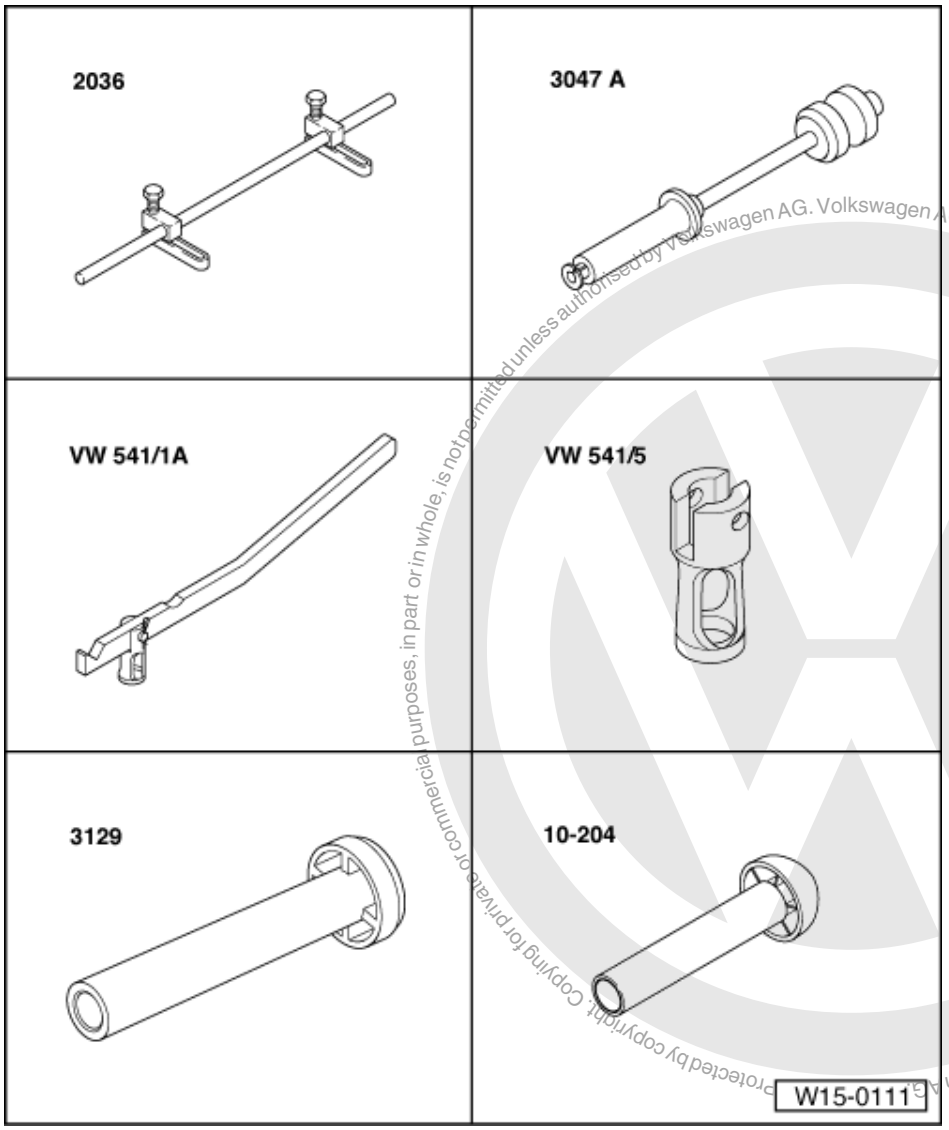

Copyright by Volkswagen AG. Volkswagen AG does not guarantee or accept any liability with respect to the correctness of information in this document. Copying for private or commercial purposes, in part or in whole, is not permitted unless authorised by Volkswagen AG. Protected by copyright.
satelettronica

Protected by copyright. Copying for private or commercial purposes, in part or in whole, is not permitted unless authorised by Volkswagen AG. Volkswagen AG does not guarantee or accept any liability with respect to the correctness of information in this document. Copyright by Volkswagen AG.

Special tools, workshop equipment, test and measuring appliances and auxiliary items required

- 2036 Assembly appliance
- 3047A Puller
- VW 541/1A Valve lever
- VW 541/5 Thrust piece

Valve stem ø 7 mm:

- 3129 Fitting tool

Valve stem ø 8 mm:

- 10-204 Fitting tool

Removing

(with cylinder head fitted)

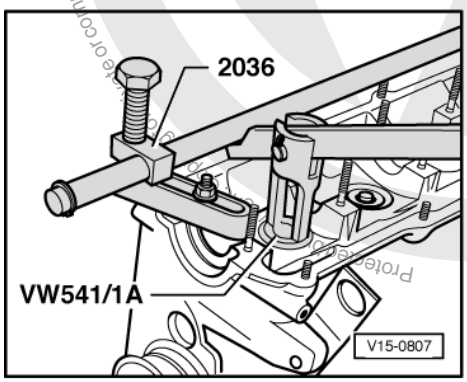

- Remove camshaft => Page 88 .
- Remove the bucket tappets and place them with the contact surface downwards. When doing this, ensure that the tappets are not interchanged.
- Set piston of respective cylinder to top dead centre (TDC).
- -> Fit assembly tool 2036 and adjust mountings to height of studs.
- Remove valve springs with lever VW 541/1A and press piece VW 541/5.

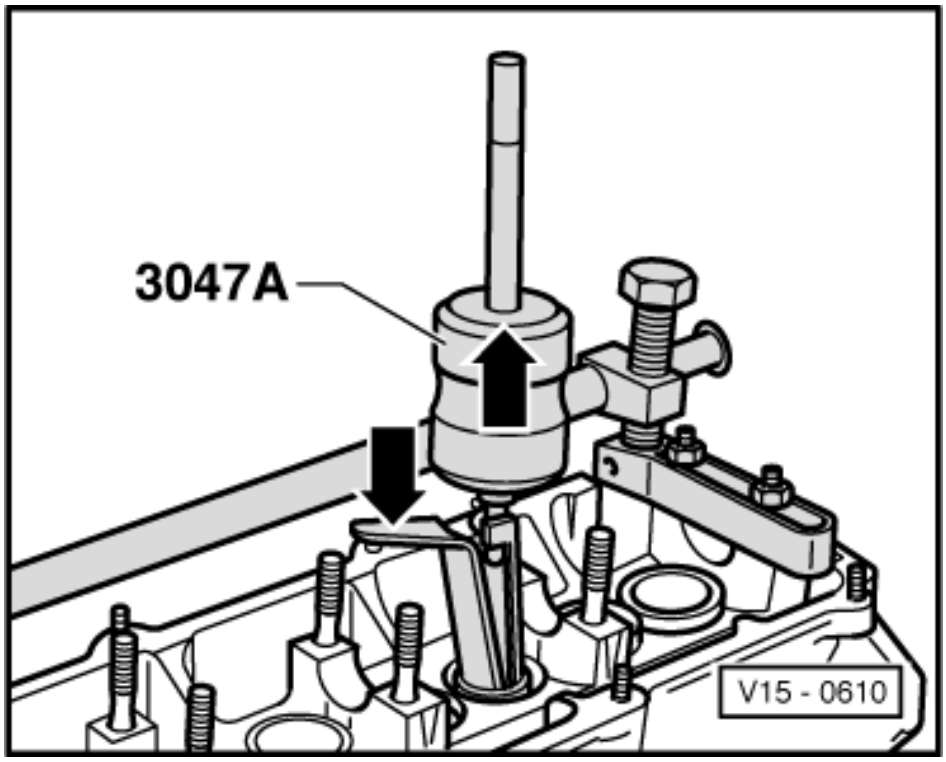

satelettronica

Note:

The valves are supported by the piston crown.

- -> Pull off valve stem seals with puller 3047A.

Installing

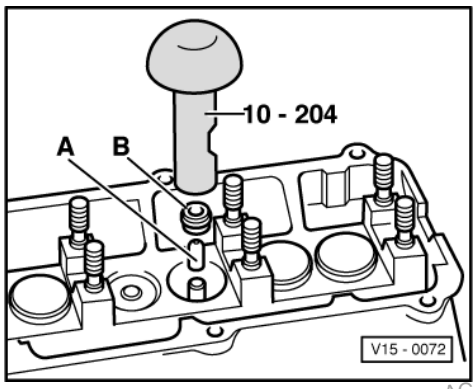

- -> Place the plastic sleeve -A- supplied on the respective valve stem. This will prevent the new valve stem seal -B- being damaged.
- Oil valve stem seal -B-, place it in tool
  Valve shaft ø 8 mm: 10-204
  Valve stem ø 7 mm: 3129
  and push carefully onto the valve guide.

Protected by copyright. Copying for private or commercial purposes, in part or in whole, is not permitted unless authorised by Volkswagen AG. Volkswagen AG does not guarantee or accept any liability with respect to the correctness of information in this document. Copyright by Volkswagen AG.
satelettronica

2.6 - Removing and installing camshaft

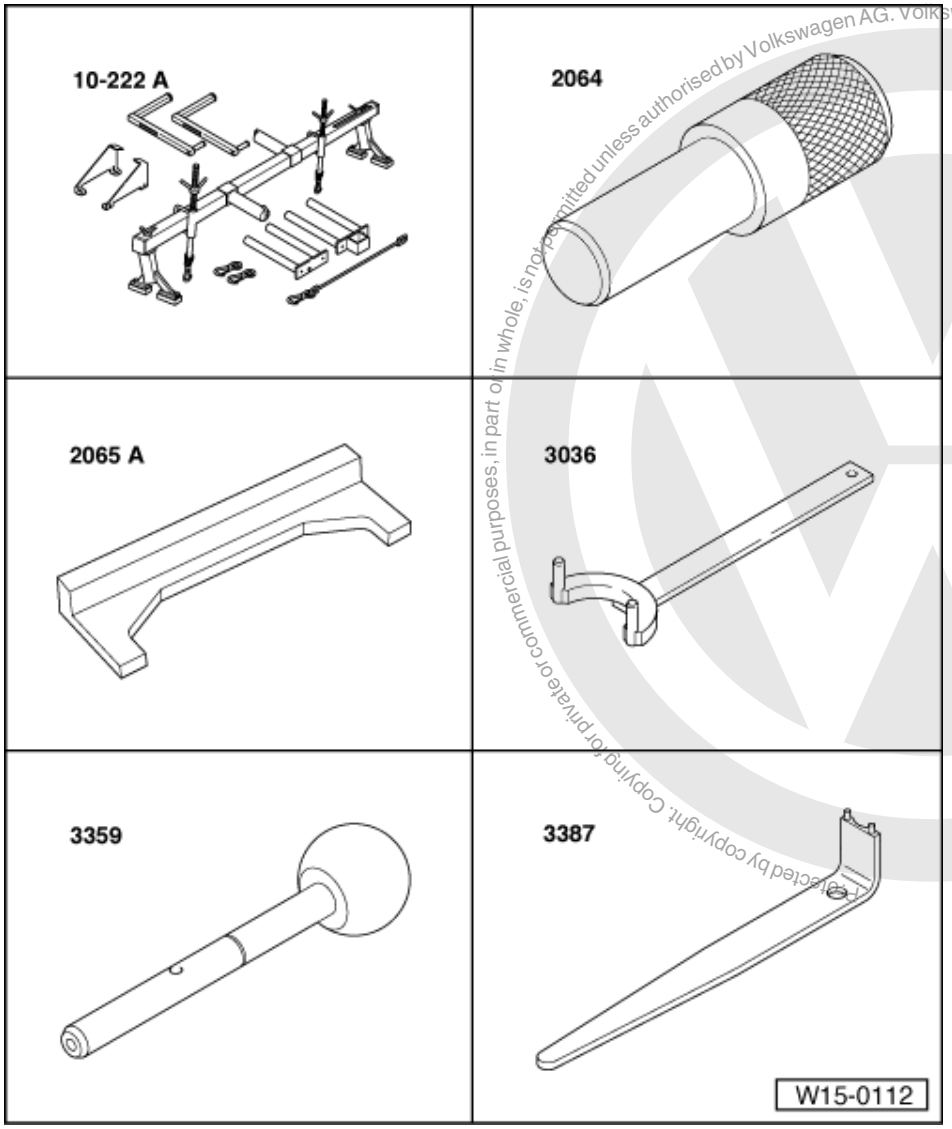

Volkswagen AG. Volkswagen AG does not guarantee or accept any liability with respect to the correctness of information in this document. Copyright by Volkswagen AG.
Reproduced by copyright. Copying for private or commercial purposes, in part or in whole, is not permitted unless authorised by Volkswagen AG.
satelettronica

Special tools, workshop equipment, test and measuring appliances and auxiliary items required

- 10-222A Engine support bracket with legs 10-222A/1
- 2064 Mandrel (for single-part injection pump sprocket)
- 2065 A Setting bar
- 3036 Counter hold tool
- 3359 Mandrel for diesel injection pump (for two-part injection pump sprocket)
- 3387 Pin wrench

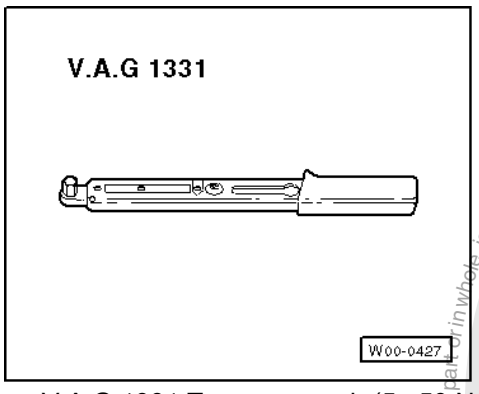

- V.A.G 1331 Torque wrench (5...50 Nm)
- AMV 174 004 01 Sealant
- Punch
- Feeler gauge

Removing

- Take toothed belt off camshaft sprocket and remove camshaft sprocket => Page 57 , Removing, installing and tensioning toothed belt.

Note:

It is not necessary to remove ribbed belt, vibration damper/belt pulley and lower toothed belt guard.

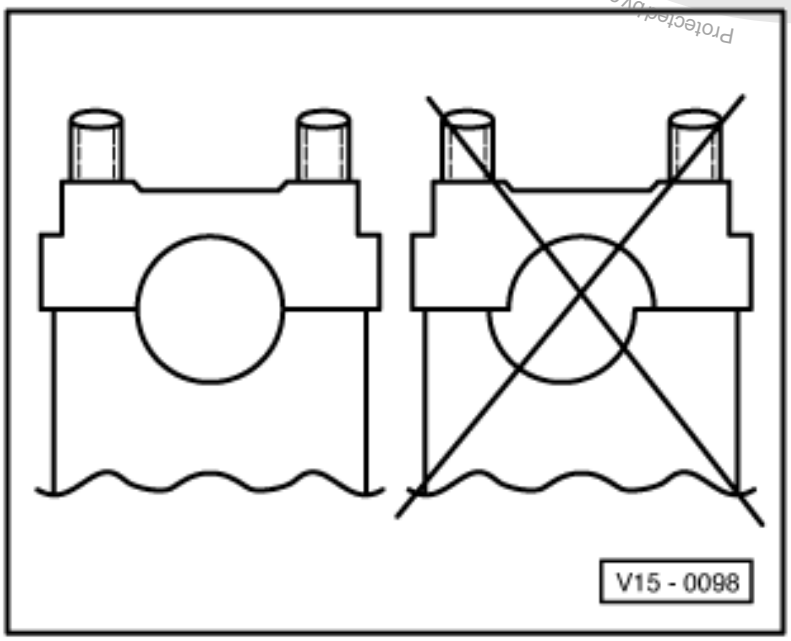

- First remove bearing caps 5, 1 and 3. Then loosen bearing caps 2 and 4 alternately and diagonally.

Installing

Notes:

- When installing the camshaft No. 1 cylinder cams must point upwards.

Protected by copyright. Copying for private or commercial purposes, in part or in whole, is not permitted unless authorised by Volkswagen AG. Volkswagen AG does not guarantee or accept any liability with respect to the correctness of information in this document. Copyright by Volkswagen AG.
satelettronica

- -> When installing the bearing cap note offset, before installing camshaft fit bearing caps and determine fitting position.

- Oil camshaft running surfaces.
- Tighten bearing caps 2 and 4 alternately and diagonally to
  20 Nm.
- Lightly coat contact surface of ends of bearing cap 1 with sealant AMV 174 004 01.
- Install bearing caps 5, 1 and 3 and also tighten to
  20 Nm.
- Locate bearing cap 5 by tapping lightly on the end of the camshaft.

The rest of the assembly is basically a reverse of the dismantling sequence.

- Fit camshaft sprocket together with toothed belt and attach with securing bolt (camshaft sprocket may still be turned).

Installing toothed belt and adjusting timing => Page 57 , Removing, installing and tensioning toothed belt.

Note:

When new tappets have been installed the engine must not be started for about 30 minutes. Hydraulic compensation elements must settle (otherwise valves will strike pistons).

2.7 - Checking hydraulic bucket tappets

Special tools, workshop equipment, testers, measuring instruments and auxiliary items required

- Feeler gauge
- Wood or plastic wedge

Notes:

- Renew defective tappet complete (cannot be adjusted or repaired).
- Irregular valve noises when starting engine are normal.

Test conditions

- Engine oil temperature min. 80 °C

Test sequence

- Start engine and run until the radiator fan has switched on once.
- Increase engine speed to about 2500 rpm for approx. 2 minutes.

If the hydraulic tappets are still noisy, locate defective tappets as follows:

- Remove cylinder head cover.
- Rotate crankshaft clockwise, until cam of the tappet to be checked is pointing upwards.
- Determine play between cam and bucket tappet.
- If the play is in excess of 0.1 mm, renew bucket tappet. If the play is less than 0.1 mm or no play, proceed with check as follows:

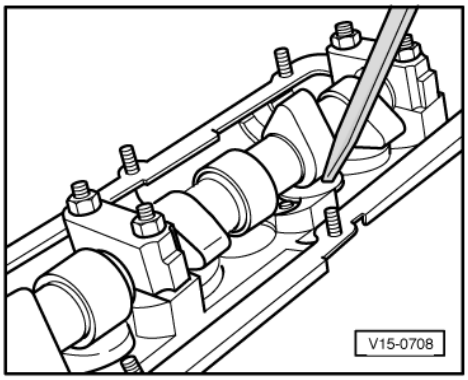

Protected by copyright. Copyright by Volkswagen AG. Volkswagen AG does not guarantee or accept any liability with respect to the correctness of information in this document. Copyright by Volkswagen AG. Reproduction in whole or in part is not permitted unless authorised by Volkswagen AG. Copying for commercial purposes, hire or commercial use is not permitted.
satelettronica

- -> Push bucket tappet down lightly with a wooden or plastic wedge. If when the bucket tappet is pushed down, a 0.1 mm thick feeler gauge can be pushed between the camshaft and bucket tappet, the bucket tappet must be replaced.

Note:

After installing new tappets the engine must not be started for approx. 30 minutes. Hydraulic compensation elements must settle (otherwise valves will strike pistons).

2.8 - Replacing swirl chambers

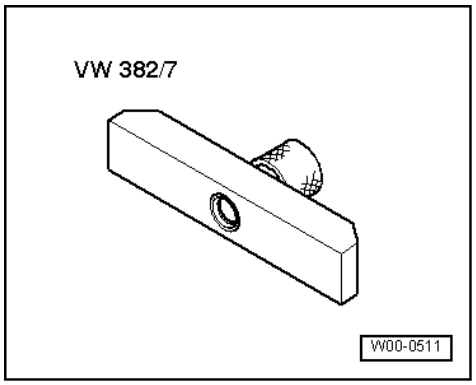

(Engine code AEF)

Special tools, workshop equipment, testers, measuring instruments and auxiliary items required

- VW 382/7 Measuring device

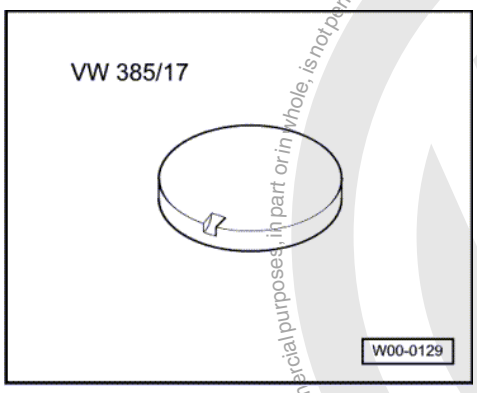

- VW 385/17 End plate
- Punch
- Synthetic-head mallet
- Dial gauge

Work sequence

- Cylinder head removed

- Removing injectors:

=> Repair group 23; Servicing fuel injection; Removing and installing injectors. Servicing fuel injection Removing and installing injectors.

- Drive swirl chamber out using a suitable drift through injector opening.

Protected by copyright. Copying for private or commercial purposes, in part or in whole, is not permitted unless authorised by Volkswagen AG. Volkswagen AG does not guarantee or accept any liability with respect to the correctness of information in this document. Copyright by Volkswagen AG.
satelettronica

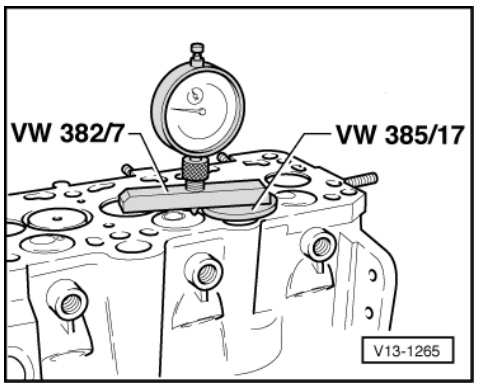

- Clean off combustion residue from swirl chamber contact surfaces in cylinder head.
- Fit new swirl chamber in position, installation position is determined by guide lug and groove.
- Drive swirl chamber in using a synthetic head hammer.
- -> Measure the swirl chamber projection.
  Specification: max. 0.05 mm

If the specification is exceeded:

- Replace cylinder head.

satelettronica

Protected by copyright. Copying for private or commercial purposes, in part or in whole, is not permitted unless authorised by Volkswagen AG. Volkswagen AG does not guarantee or accept any liability with respect to the correctness of information in this document. Copyright by Volkswagen AG.

17 - Lubrication

1 - Removing and installing parts of the lubrication system

1.1 - Removing and installing parts of the lubrication system

Notes:

- If large quantities of metal particles or other deposits (caused, for example, by partial seizure of the crankshaft or conrod bearings) are found in the engine oil when performing repairs, clean the oil passages thoroughly and renew the oil cooler in order to prevent further damage from occurring later.
- The oil level must not be above the max. mark - danger of damage to catalyst!

Checking oil pressure => Page 101

Oil system capacity1):

with oil filter 4.7 ltrs.

1) Up-to-date figures:

=> Exhaust emissions test binder

Engine oil specifications:

Only use engine oil conforming to VW standard 50000, 50101 or 50500 or multi-grade oil corresponding to API-CD.

Protected by copyright. Copying for private or commercial purposes, in part or in whole, is not permitted unless authorised by Volkswagen AG. Volkswagen AG does not guarantee or accept any liability with respect to the correctness of information in this document. Copyright by Volkswagen AG.
satelettronica

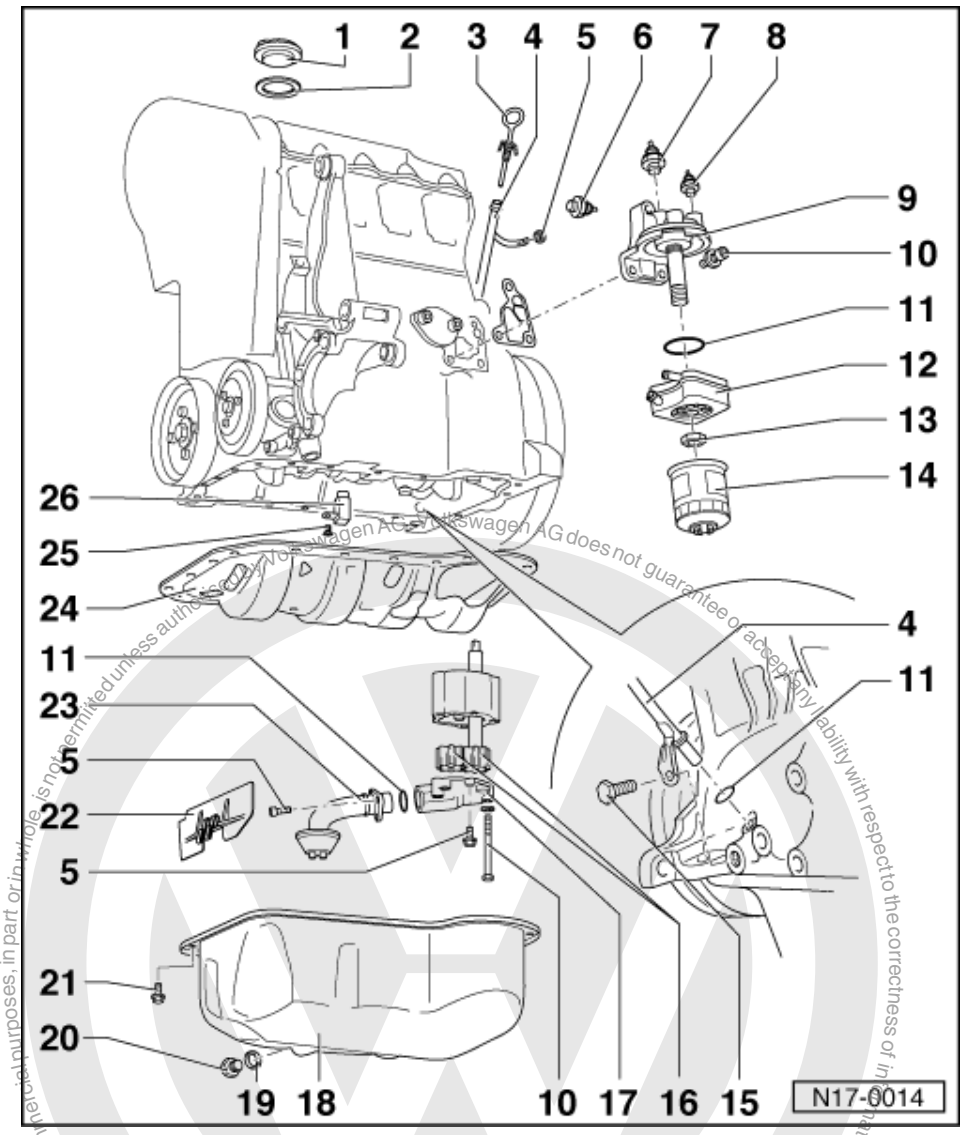

1 Cap
2 Gasket
- Renew if damaged

3 Dipstick
- The oil level must not be above the max. mark!
- Markings, Fig. 3

4 Guide tube
- For dipstick

5 M6 = 10 Nm
M8 = 20 Nm

6 0.25 bar oil pressure switch (F22), 25Nm
- ‣08.97
- Blue
- If sealing ring is leaking nip open and replace.
- Checking => Page 101

Protected by copyright. Copying for private or commercial purposes, in part or in whole, is not permitted unless authorised by Volkswagen AG. Volkswagen AG does not guarantee or accept any liability with respect to the correctness of information in this document. Copyright by Volkswagen AG.

satelettronica

Protected by copyright. Copying for private or commercial purposes, in part or in whole, is not permitted unless authorised by Volkswagen AG. Volkswagen AG does not guarantee or accept any liability with respect to the correctness of information in this document. Copyright by Volkswagen AG.

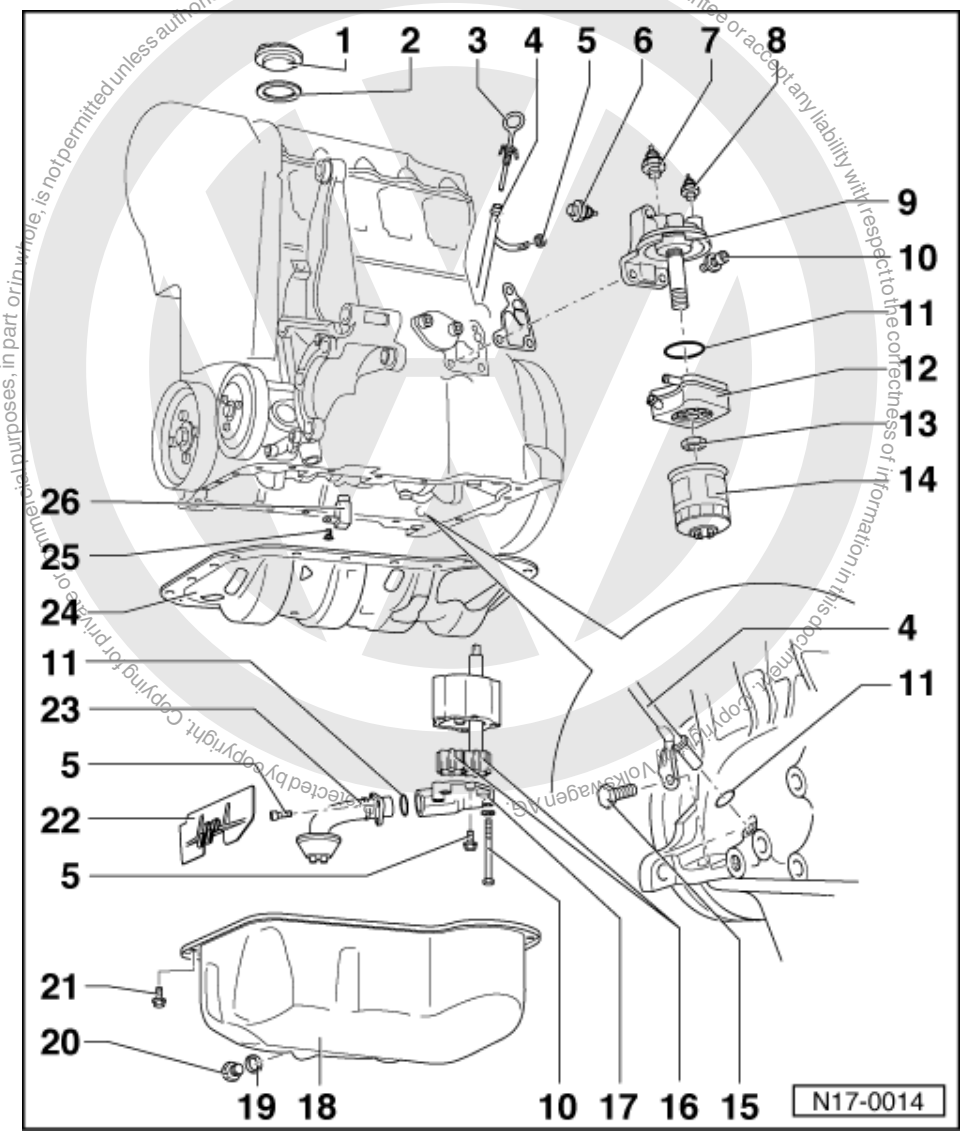

7 0.9 bar oil pressure switch (F1), 25 Nm
- Grey or brown
- If sealing ring is leaking nip open and replace.
- Checking => Page 101

8 Oil temperature sender (G8)
- Engine code AEF
- For oil temperature gauge
- White

9 Oil filter bracket

10 25 Nm

11 O-ring
- Renew

satelettronica

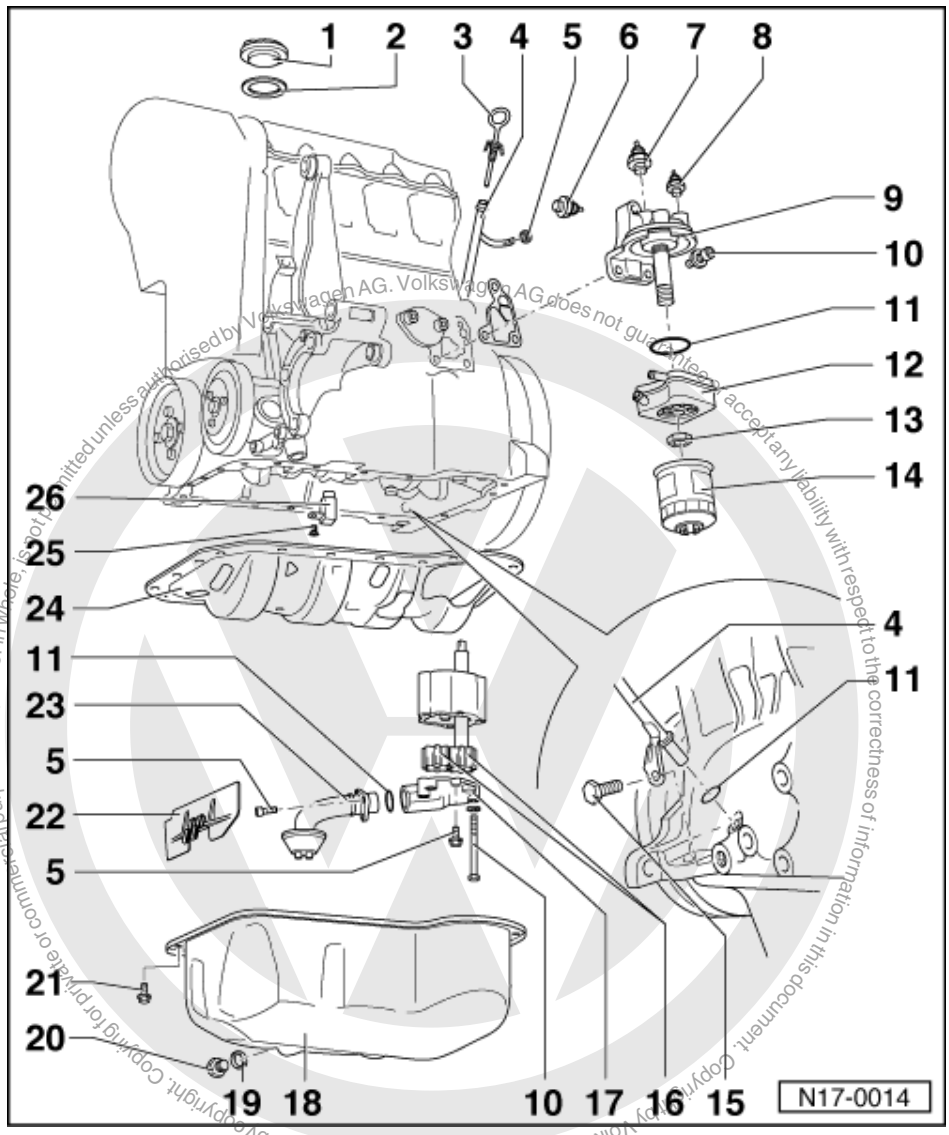

12 Oil cooler

- Engine codes AEF, AGD and ASX
- Coat surface contacting oil filter bracket outside the seal with AMV 188 100 02
- Ensure clearance to adjacent components
- See note
  => Page 93

13 25 Nm

14 Oil filter

- Loosen with strap wrench
- Tighten by hand
- Observe installation instructions on oil filter

15 45 Nm

16 Gears

- Checking backlash
  => Fig. 1
- Checking axial clearance
  => Fig. 2

Protected by copyright. Copying for private or commercial purposes, in part or in whole, is not permitted unless authorised by Volkswagen AG. Volkswagen AG does not guarantee or accept any liability with respect to the correctness of information in this document. Copyright by Volkswagen AG.

satelettronica

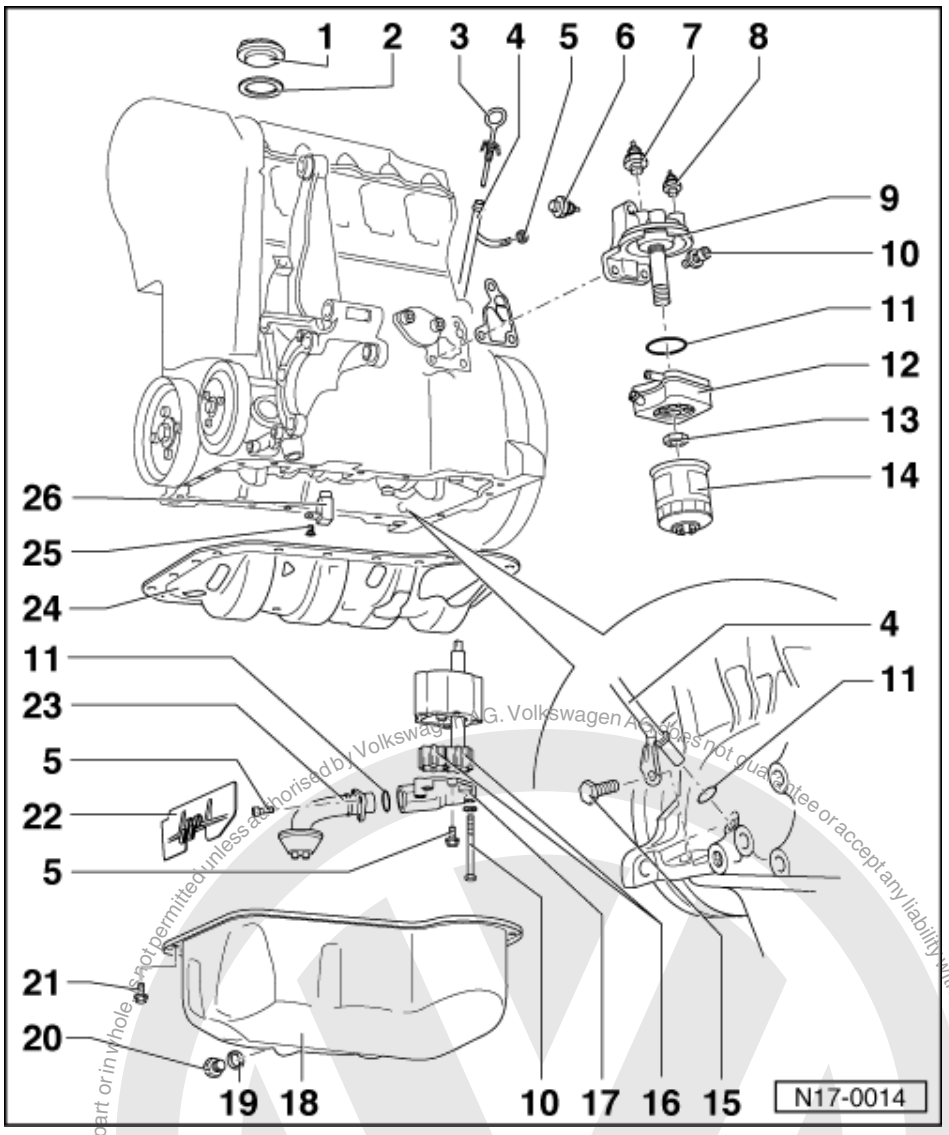

17 Oil pump cover with pressure relief valve
- Opening pressure: 5.7...6.7 bar

18 Sump
- Clean sealing surface before installing

19 Seal
- Renew

20 Oil drain plug, 30 Nm

21 20 Nm
- Remove and install both rear bolts gearbox end with jointed spanner 3185

22 Baffle plate

23 Suction pipe
- Clean strainer if soiled

Protected by copyright. Copying for private or commercial purposes, in part or in whole, is not permitted unless authorised by Volkswagen AG. Volkswagen AG does not guarantee or accept any liability with respect to the correctness of information in this document. Copyright by Volkswagen AG.
satelettronica

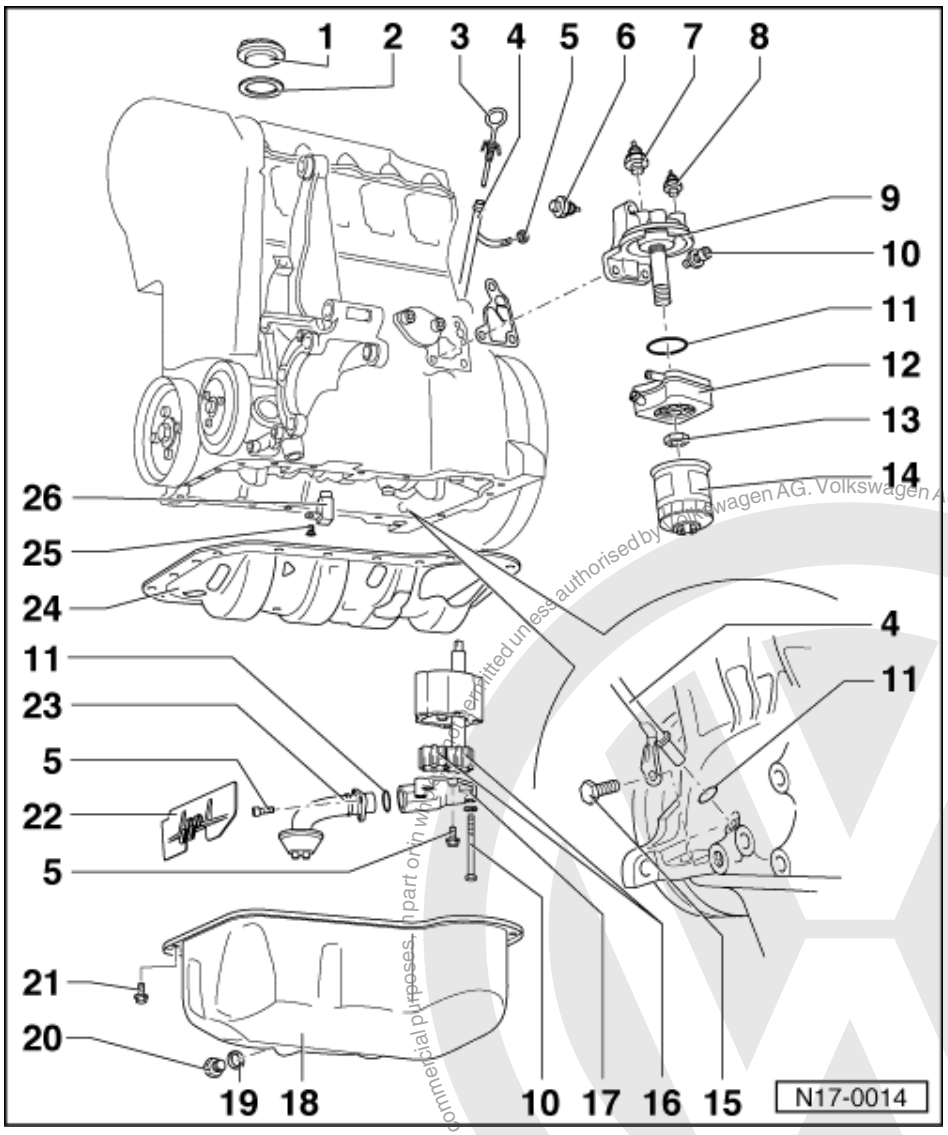

24 Baffle plate

- With gasket
- Renew gasket if damaged
- Before fitting gasket coat sump flange/cylinder block flange with "D2"
- Engine codes AGD, AHG, AKU, ASX only renew gasket

25 10 Nm

- Install with locking fluid AMV 188 100 02

26 Oil spray jet

- For piston cooling

Protected by copyright. Copying for private or commercial purposes, in part or in whole, is not permitted unless authorised by Volkswagen AG. Volkswagen AG does not guarantee or accept any liability with respect to the correctness of information in this document. Copyright by Volkswagen AG.
satelettronica

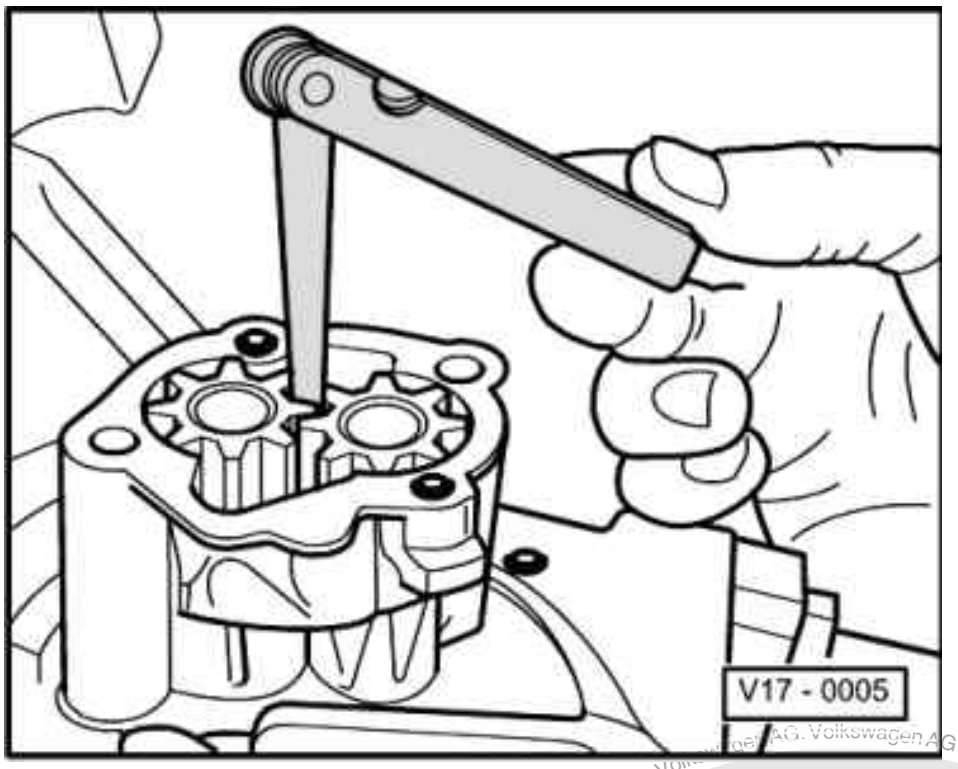

-> Fig. 1 Checking oil pump backlash

Special tools, workshop equipment, testers, measuring instruments and auxiliary items required

- Feeler gauge

  New: 0.05 mm

  Wear limit: 0.20 mm

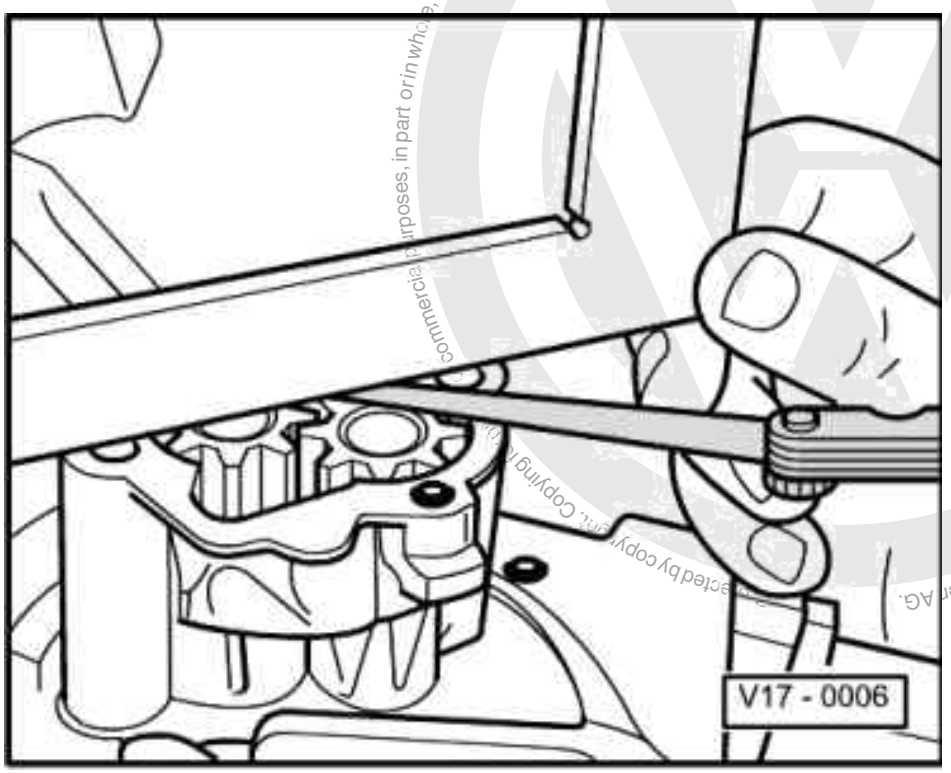

Copyright by Volkswagen AG. Volkswagen AG does not guarantee or accept any liability with respect to the correctness of information in this document. Copyright by Volkswagen AG. Copying for commercial purposes, in part or in whole, is not permitted unless authorised by Volkswagen AG. Copying for private or public use is prohibited by copyright law.
satelettronica

-> Fig. 2 Checking oil pump axial clearance

Special tools, workshop equipment, testers, measuring instruments and auxiliary items required

- Straight edge
- Feeler gauge

Wear limit: 0.15 mm

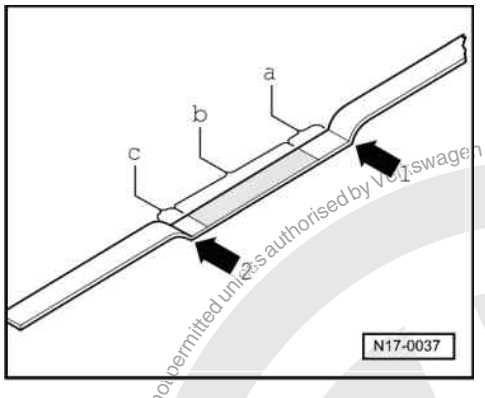

-> Fig.3 Dipstick markings

1 - max. mark
2 - min. mark
a - Area above hatched field up to max. mark: Do not replenish with engine oil!
b - Oil level within hatched field: can be replenished with engine oil
c - Area from min. mark up to hatched field: replenish with max. 0.5 ltr. of engine oil!

Protected by copyright. Copying for private or commercial purposes, in part or in whole is not permitted unless authorised by Volkswagen AG. Volkswagen AG does not guarantee or accept any liability with respect to the correctness of information in this document. Copyright by Volkswagen AG.
satelettronica

1.2 - Checking oil pressure and oil pressure switch

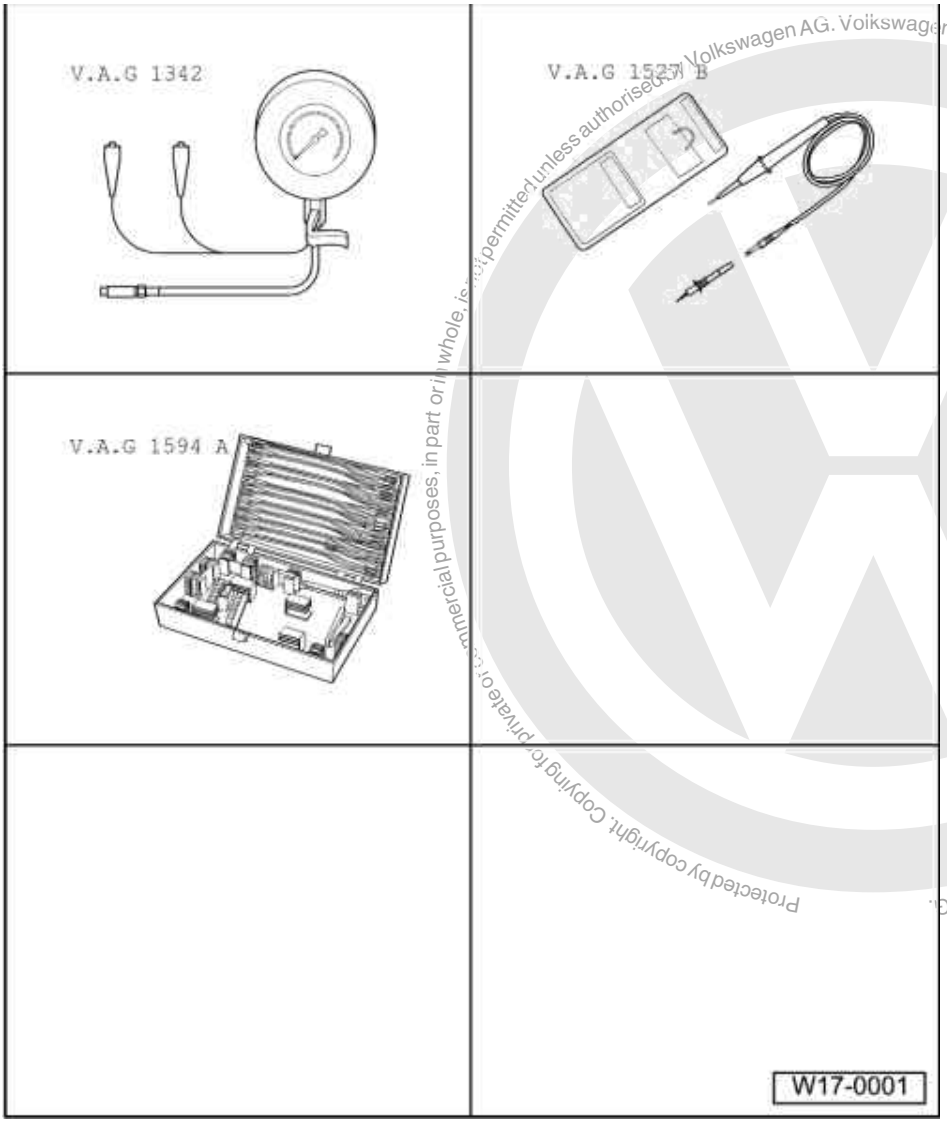

Protected by copyright. Copying for private or commercial purposes, in part or in whole, is not permitted unless authorised by Volkswagen AG. Volkswagen AG does not guarantee or accept any liability with respect to the correctness of information in this document. Copyright by Volkswagen AG.
satelettronica

Special tools, workshop equipment, test and measuring appliances and auxiliary items required

- V.A.G 1342 Oil pressure tester
- V.A.G 1527 B Diode test lamp
- V.A.G 1594 A Adapter set

Note:

Functional check and servicing the optical and acoustic oil pressure warning:

=> Current flow diagrams, Electrical fault finding and Fitting locations

Test conditions

- Engine oil level OK, checking => Page 100 , Fig. 3
- Engine oil temperature min. 80 °C

Test sequence

Vehicles ▸08.97

Vehicles 09.97 ▸ =>Page 102 .

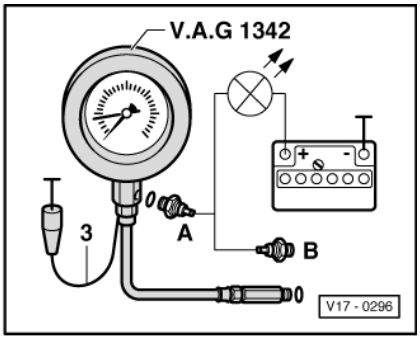

- -> Remove 0.25 bar oil pressure switch (blue insulation) and screw into tester.
- Screw tester into the cylinder head in place of the oil pressure switch.
- Connect brown wire -3- of tester to earth (-).
- Connect diode test lamp V.A.G 1527 using adapter cables from V.A.G 1594 A to battery positive (+) and to 0.25 bar oil pressure switch (F22, blue insulation) -A-.
  LED must light up.

- Start engine and increase speed slowly.
  At
  0.15...0.35 bar
  the LED must go out. Otherwise, renew oil pressure switch.
- Connect diode test lamp to 0.9 bar oil pressure switch (F1) -B-.
  At
  0.75...1.05 bar
  The LED must light up, otherwise renew oil pressure switch.
- Increase engine speed further.
  At 2000 rpm and an oil temperature of 80 °C the oil pressure should be at least 2.0 bar.

At higher engine speed the oil pressure must not exceed 7.0 bar. If necessary renew oil pump cover with pressure relief valve.

Vehicles09.97 ▸

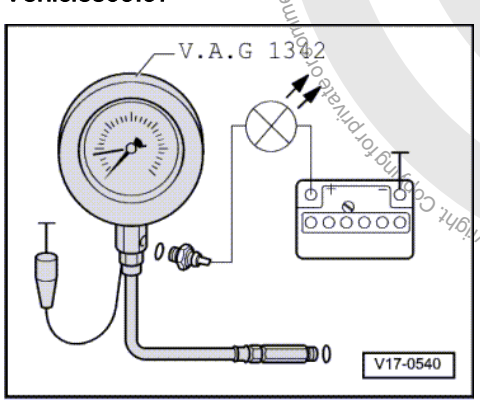

- -> Remove oil pressure switch (F1) and screw into tester.
- Screw tester into the oil filter bracket in place of the oil pressure switch.
- Connect brown wire of tester to earth (-).
- Connect diode test lamp V.A.G 1527 B using adapter cables from V.A.G 1594 A to battery positive (+) and oil pressure switch.
  LED must not light up.
- Start engine and increase speed slowly.
  At
  0.75...1.05 bar
  the LED must light up, otherwise renew oil pressure switch.

Protected by copyright. Copying for private or commercial purposes, in part or in whole, is not permitted unless authorised by Volkswagen AG. Volkswagen AG does not guarantee or accept any liability with respect to the correctness of information in this document. Copyright by Volkswagen AG.
satelettronica

- Increase engine speed further.
  At 2000 rpm and an oil temperature of 80 °C the oil pressure should be at least 2.0 bar.

At higher engine speed the oil pressure must not exceed 7.0 bar. If necessary renew oil pump cover with pressure relief valve.

Protected by copyright. Copying for private or commercial purposes, in part or in whole, is not permitted unless authorised by Volkswagen AG. Volkswagen AG does not guarantee or accept any liability with respect to the correctness of information in this document. Copyright by Volkswagen AG.

satelettronica

19 - Cooling system

1 - Removing and installing parts of cooling system

1.1 - Removing and installing parts of cooling system

Notes:

- When the engine is warm the cooling system is under pressure. If necessary release pressure before commencing repair work.
- Hoses are secured with spring-type clips. In cases of repair only use spring-type clips.
- Assembly tool VAS 5024 or hose clip pliers V.A.G 1921 are recommended for fitting spring-type clips.
- When installing coolant hoses route stress-free, so that they do not come into contact with other components (observe markings on coolant connection and hose).

Perform leak test of cooling system using cooling system tester V.A.G 1274 and adapters V.A.G 1274/3 and V.A.G 1274/4.

Parts of cooling system body side =>Page 105 .

Parts of cooling system engine side => 108 .

Removing and installing coolant pump and compact bracket =>Page 112 .

Draining and filling with coolant=> Page 115 .

Coolant mixture ratios => Page 115 , draining and filling with coolant

Protected by copyright. Copying for private or commercial purposes, in part or in whole, is not permitted unless authorised by Volkswagen AG. Volkswagen AG does not guarantee or accept any liability with respect to the correctness of information in this document. Copyright by Volkswagen AG.

satelettronica

1.2 - Parts of cooling system body side

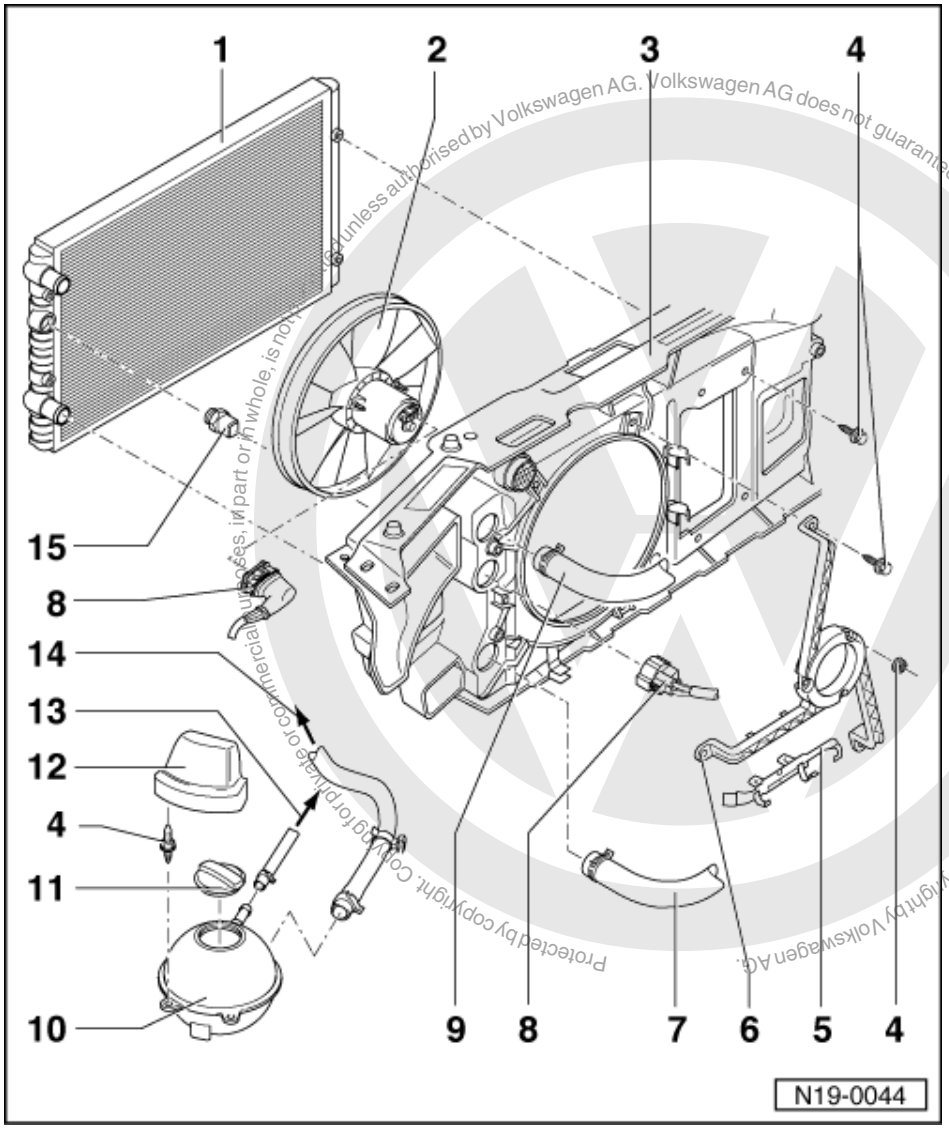

Protected by copyright. Copying for private or commercial purposes, in part or in whole, is not permitted unless authorised by Volkswagen AG. Volkswagen AG does not guarantee or accept any liability with respect to the correctness of information in this document. Copyright by Volkswagen AG.

satelettronica

1 Radiator
- Removing and installing =>Page 117
- After replacing renew entire coolant

2 Radiator fan (V7)

3 Lock carrier

4 10 Nm

5 Cable/line guide

6 Fan retainer
- For radiator fan (V7)

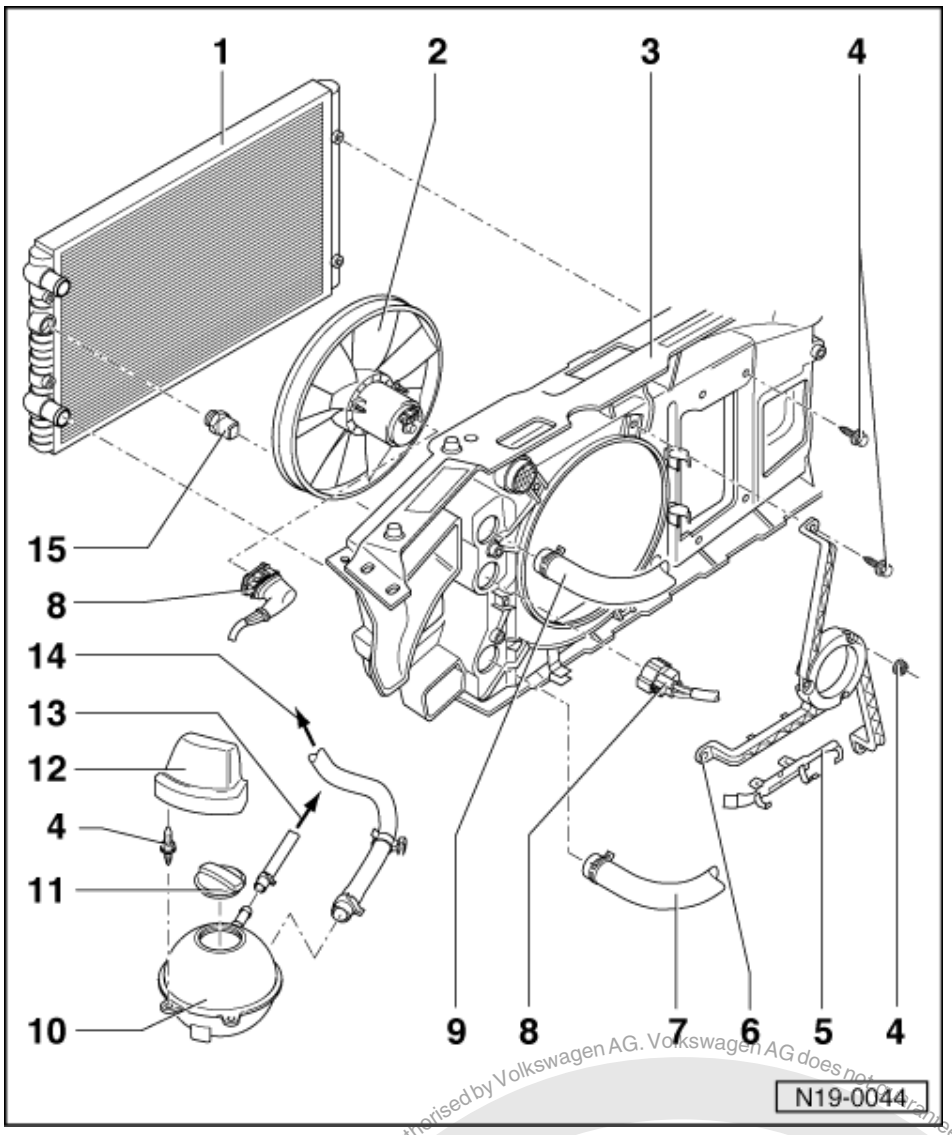

7 Lower coolant hose
- To thermostat housing
  =>Page 109 , Item 12

8 Connector

9 Upper coolant hose
- To connection
  =>Page 111 , Item 18

10 Expansion tank
- Perform leak test of cooling system using cooling system tester V.A.G 1274 and adapter V.A.G1274/3

11 Cap
- Check with cooling system tester V.A.G 1274 and adapter V.A.G 1274/4
- Test pressure 1.4...1.6 bar

12 Cover

Protected by copyright. Copying for private or commercial purposes, in part or in whole, is not permitted unless authorised by Volkswagen AG. Volkswagen AG does not guarantee or accept any liability with respect to the correctness of information in this document. Copyright by Volkswagen AG.
satelettronica

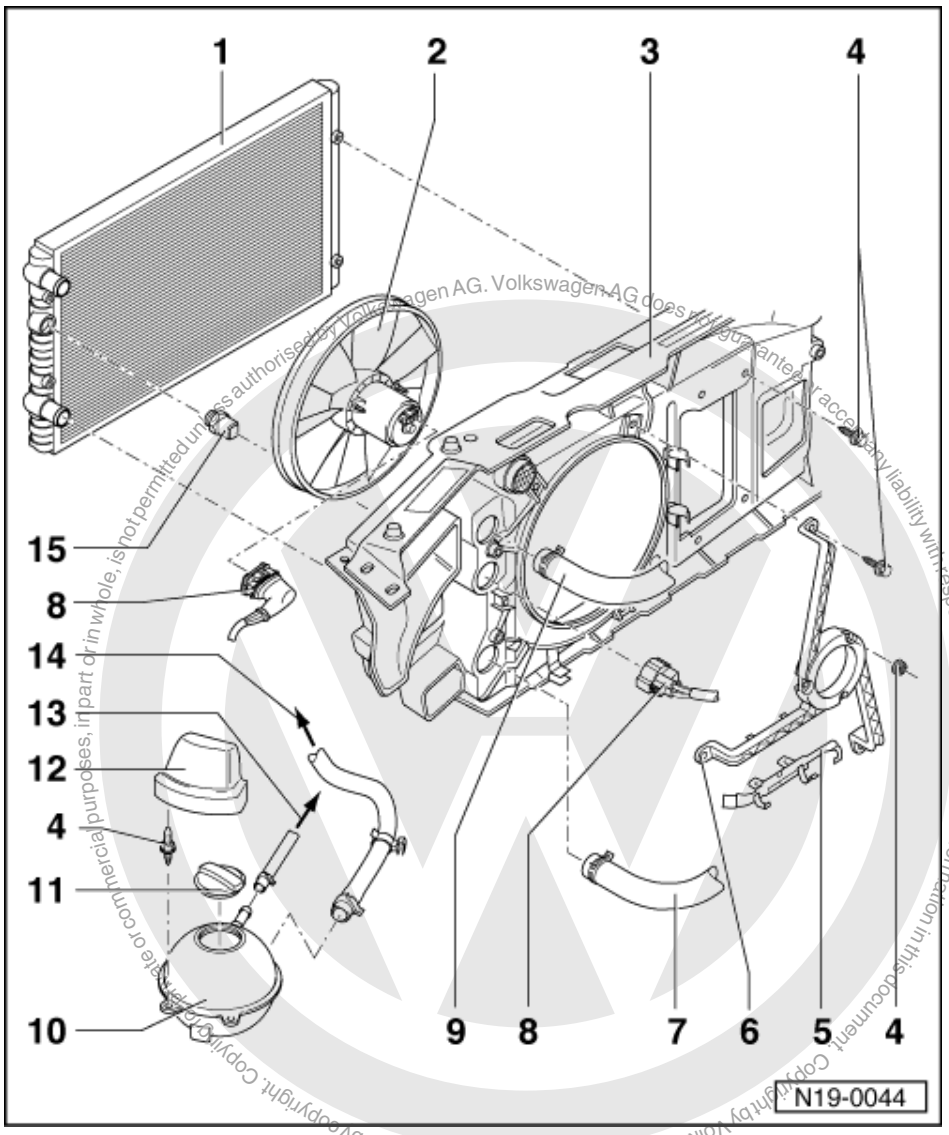

Protected by copyright. Copyright by Volkswagen AG.
Volkswagen AG. Volkswagen AG does not guarantee or accept any liability with respect to the correctness of information in this document. Copyright by Volkswagen AG.
not permitted unless authorised by Volkswagen AG. Volkswagen AG does not guarantee or accept any liability with respect to the correctness of information in this document. Copyright by Volkswagen AG.
commercial purposes, in part or in whole, is not permitted unless authorised by Volkswagen AG. Volkswagen AG does not guarantee or accept any liability with respect to the correctness of information in this document. Copyright by Volkswagen AG.

13 To cylinder head

- =>Page 108 , Item 5

14 To coolant pipe

- =>Page 109 , Item 8

15 Thermo-switch (F18), 35 Nm

- For radiator fan (V7)
- Switching temperatures:
  Stage 1
  on: 92...97 °C
  off: 84...91 °C
  Stage 2
  on: 99...105 °C
  off: 91...98 °C

satelettronica

1.3 - Parts of cooling system engine side

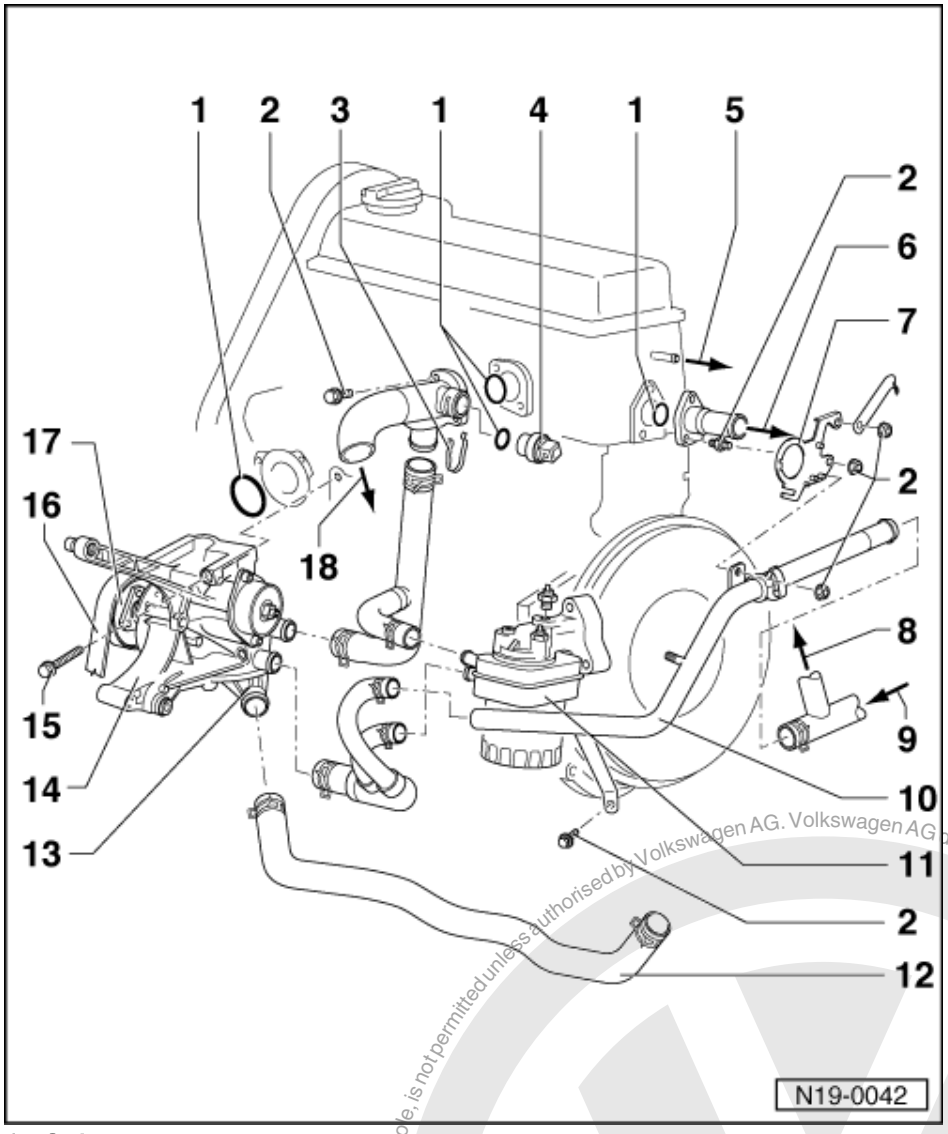

1 O ring
- Renew

2 10 Nm

3 Retaining clip
- Check securely seated

4 Coolant temperature sender (G62) or temperature sender (G27)
- With coolant temperature gauge sender (G2)
- For engine control unit
- If necessary release pressure in cooling system before removing
- Checking G62 or G27:

=> Repair Group 01; Self-diagnosis; Interrogating fault memory Self-diagnosis Interrogating fault memory

5 To expansion tank
- =>Page 107 , Item 13

Protected by copyright. Copying for private or commercial purposes, in part or in whole, is not permitted unless authorised by Volkswagen AG. Volkswagen AG does not guarantee or accept any liability with respect to the correctness of information in this document. Copyright by Volkswagen AG.
satelettronica

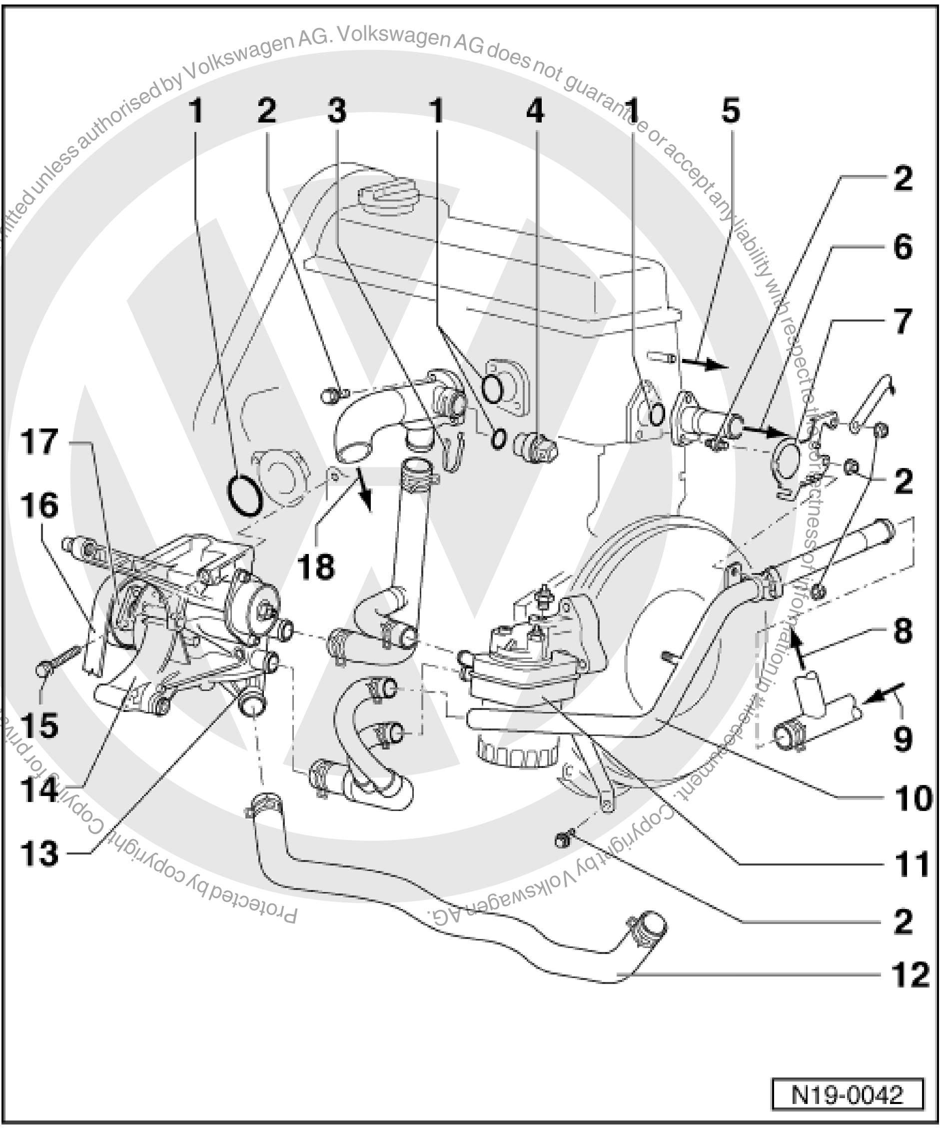

Protected by copyright. Copying for private or commercial purposes, in part or in whole, is not permitted unless authorised by Volkswagen AG. Volkswagen AG does not guarantee or accept any liability with respect to the correctness of information in this document. Copyright by Volkswagen AG.

6 To heat exchanger

7 Bracket

8 To expansion tank

- =>Page 107 , Item 14

9 From heat exchanger

10 Coolant pipe

11 Oil cooler

- Engine codes AEF, AGD and ASX
- Removing and installing =>Page 96 , Item 12

12 Lower coolant hose

- From bottom of radiator =>Page 106 , Item 7

13 Thermostat housing

satelettronica

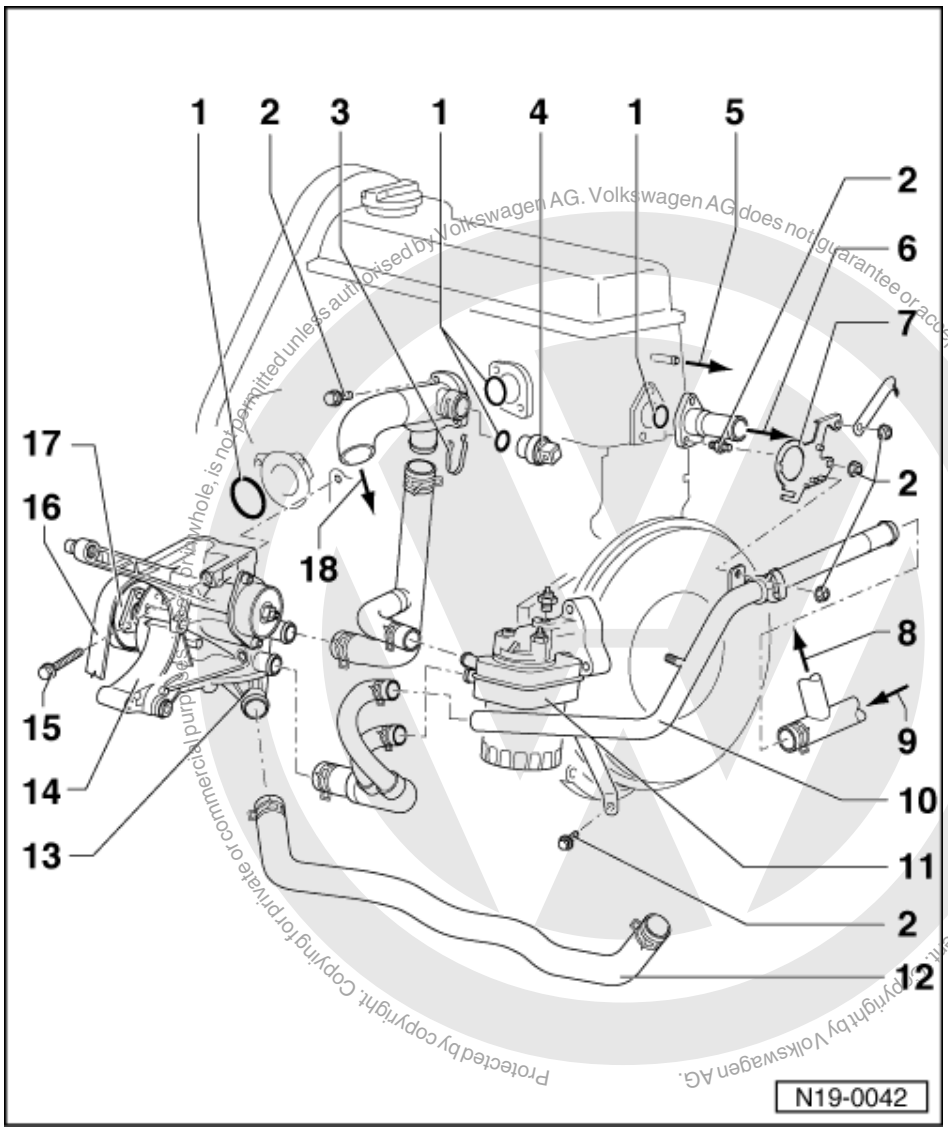

Protected by copyright. Copying for private or commercial purposes, in whole, is not permitted unless authorised by Volkswagen AG. Volkswagen AG does not guarantee or accept any liability with respect to the correctness of information in this document. Copyright by Volkswagen AG.

satelettronica

14 Compact bracket

- For coolant pump, coolant thermostat, ribbed belt tensioning roller, alternator and P.A.S. vane pump
- Removing and installing
  => Page 112

15 25 Nm

- Note tightening sequence
  Page => 114 , Fig. 1

16 Ribbed belt

- Mark direction of rotation before removing
- Check for wear
- Do not kink
- Removing and installing
  => Page 23

17 Pulley

- For coolant pump
- Removing and installing coolant pump and compact bracket => Page 112

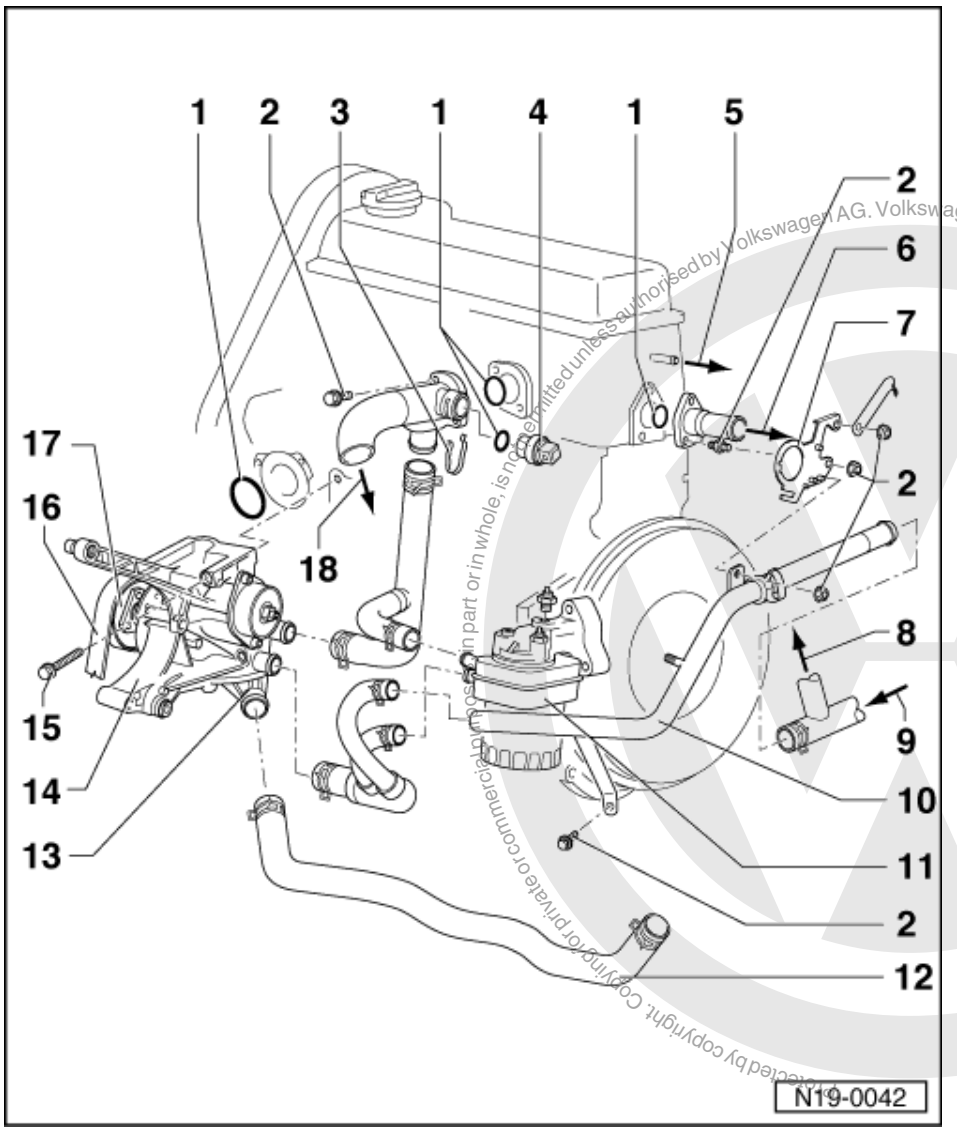

18 To top of radiator

- =>Page 106 , Item 9

satelettronica
Copyright by Volkswagen AG. Volkswagen AG does not guarantee or accept any liability with respect to the correctness of information in this document. Copyright by Volkswagen AG. Protected by copyright. Copying for private or commercial purposes, in part or in whole, is not permitted unless authorised by Volkswagen AG.

1.4 - Removing and installing coolant pump and compact bracket

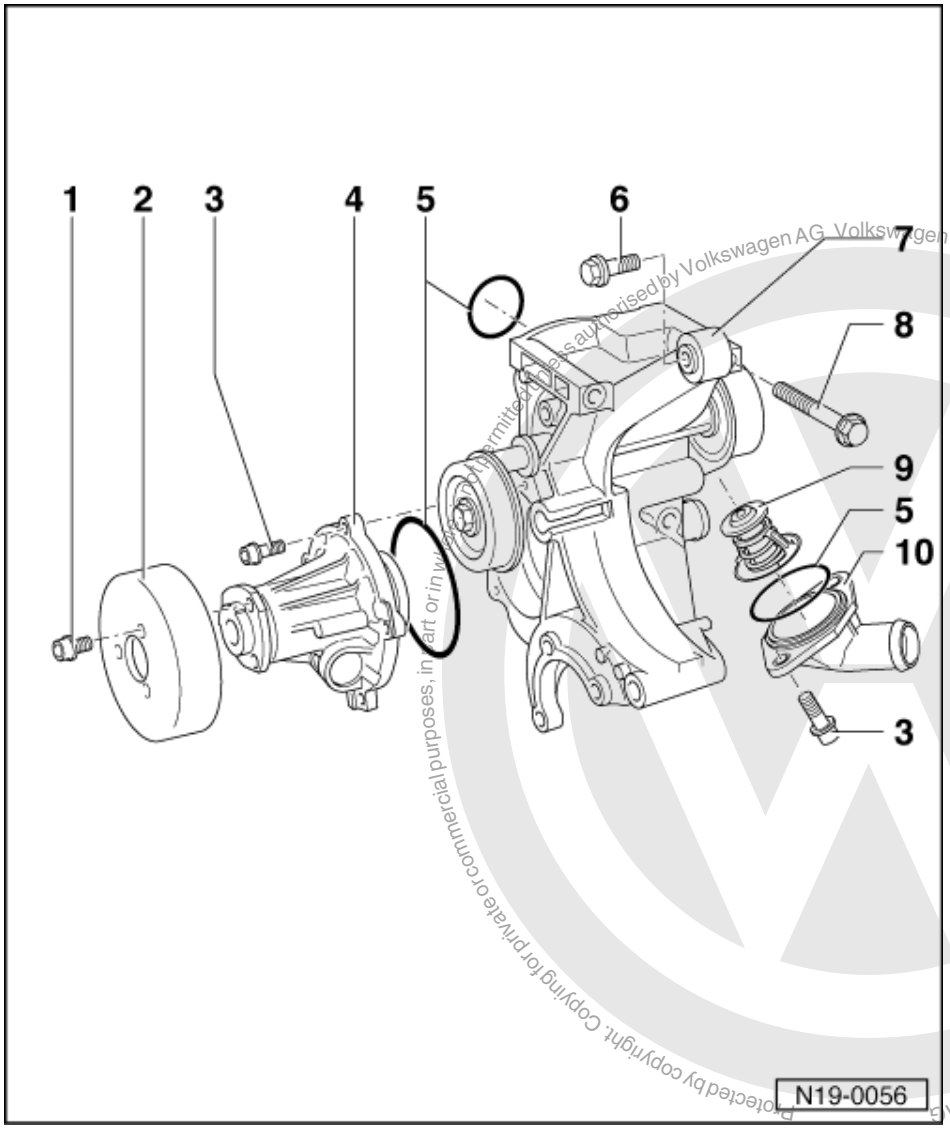

Protected by copyright. Copying for private or commercial purposes, in part or in whole, is not permitted unless authorised by Volkswagen AG. Volkswagen AG does not guarantee or accept any liability with respect to the correctness of information in this document. Copyright by Volkswagen AG

satelettronica

1 25 Nm
2 Belt pulley
3 10 Nm
4 Coolant pump
- Check for ease of movement

5 O-ring
- Renew

6 25 Nm
- Do not tighten until the injection pump is bolted tightly to the console
- Note tightening sequence
  Page => 114 , Fig. 1

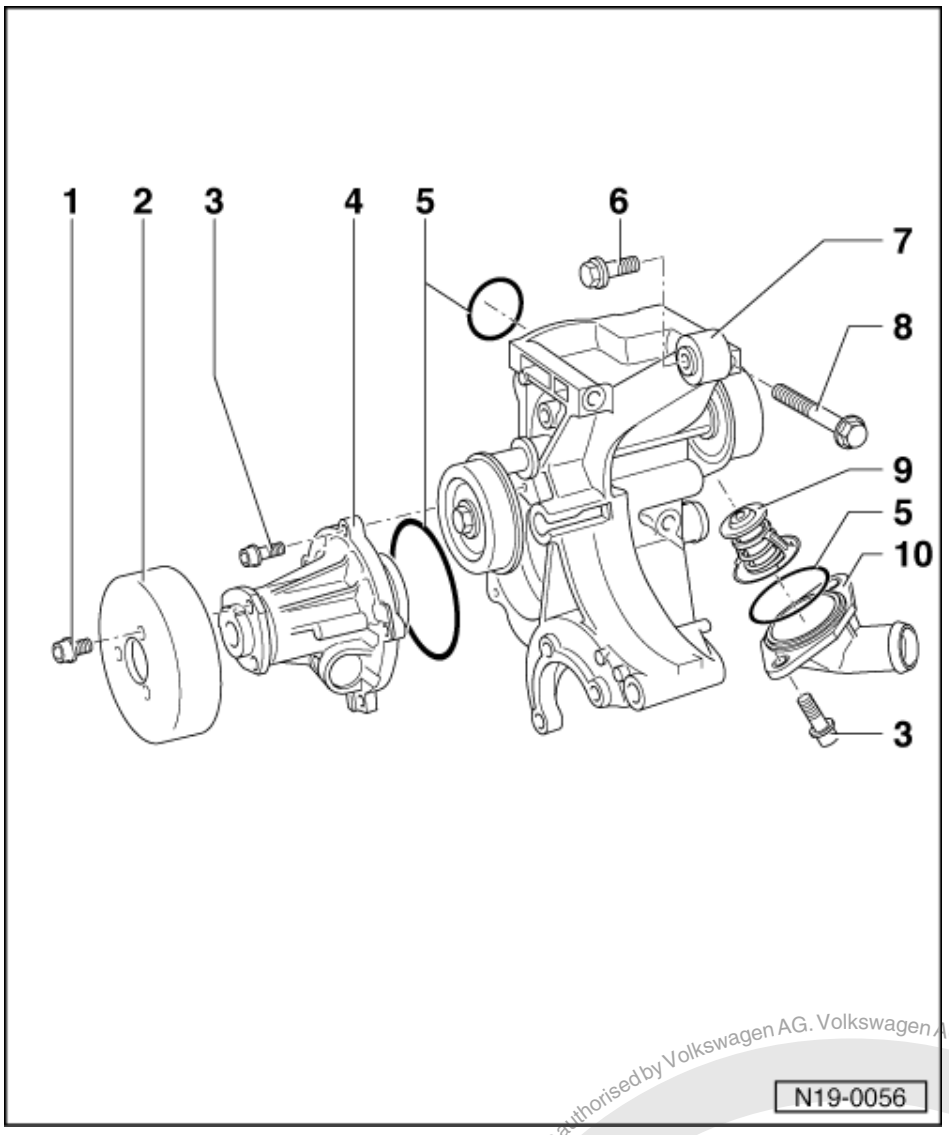

7 Compact bracket
- For coolant pump, coolant thermostat, ribbed belt tensioning roller, alternator and P.A.S. vane pump

8 25 Nm
- Note tightening sequence
  Page => 114 , Fig. 1

9 Coolant thermostat
- Checking: heat-up thermostat in water
- Opening commences approx. 85 °C
- Ends approx. 105 °C
- Opening lift min. 7 mm

10 Connection

Protected by copyright. Copying for private or commercial purposes, in part or entirely, is not permitted unless authorised by Volkswagen AG. Volkswagen AG does not guarantee or accept any liability with respect to the correctness of information in this document. Copyright by Volkswagen AG.
satelettronica

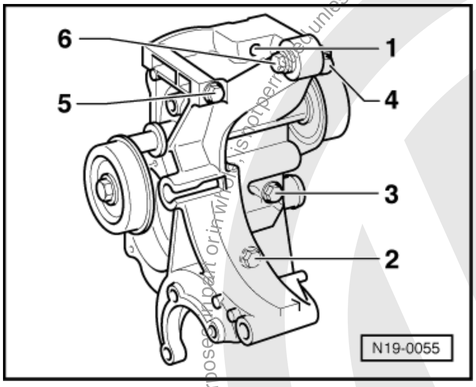

-> Fig. 1 **Tightening sequence compact bracket to cylinder block**

1 - Guide bracket into fitted hole -1-
2 - Tighten bolt -2-, 25 Nm
3 - Tighten bolt -3-, 25 Nm
4 - Tighten bolt -4-, 25 Nm
5 - Tighten bolt -5-, 25 Nm
6 - Tighten bolt -6-, 25 Nm (injection pump must be tightly bolted to console)

Protected by copyright. Copying for private or commercial purposes, in part or in whole, is not permitted unless authorised by Volkswagen AG. Volkswagen AG does not guarantee or accept any liability with respect to the correctness of information in this document. Copyright by Volkswagen AG.

satelettronica

1.5 - Draining and filling cooling system

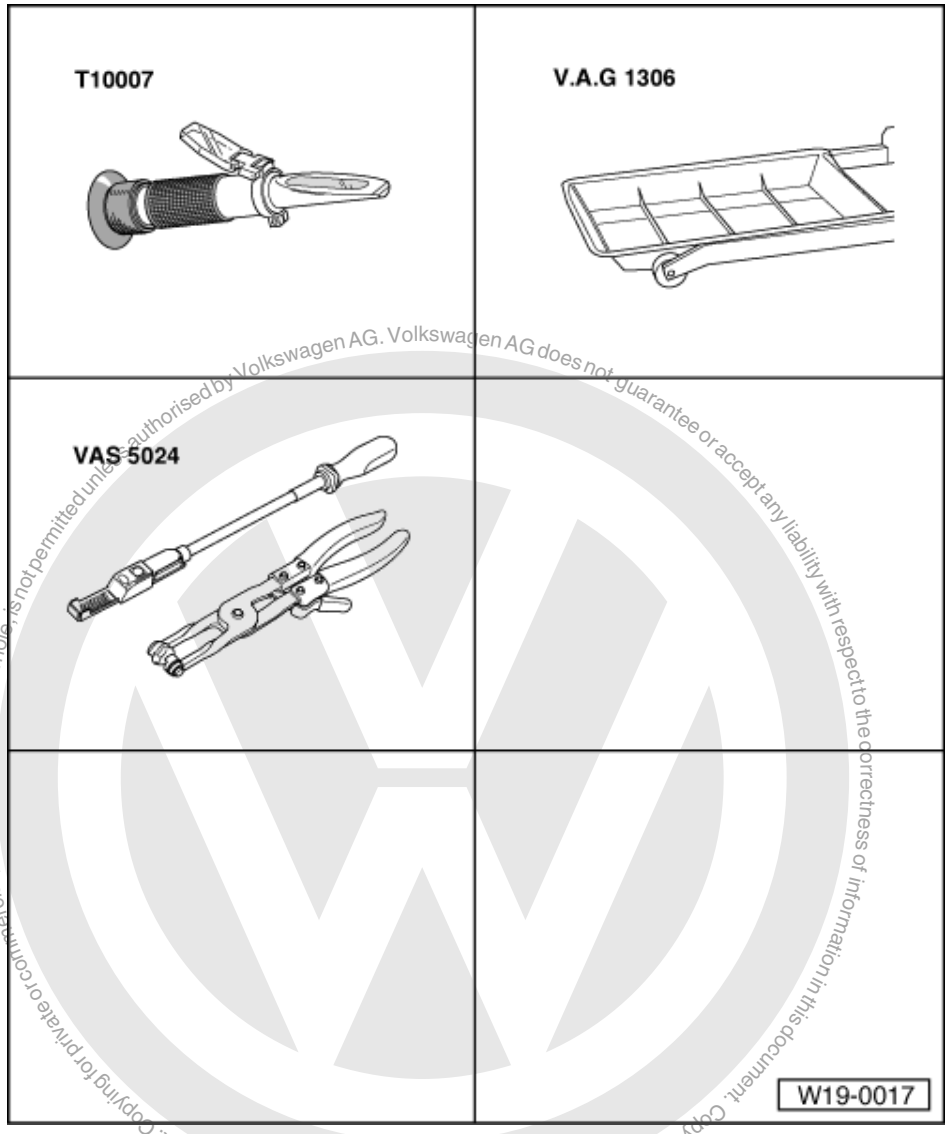

Protected by copyright. Copying for private or commercial purposes, in part or in whole, is not permitted unless authorised by Volkswagen AG. Volkswagen AG does not guarantee or accept any liability with respect to the correctness of information in this document. Copyright by Volkswagen AG.

satelettronica

Special tools, workshop equipment, test and measuring appliances and auxiliary items required

- T10007 Refractometer
- V.A.G 1306 Drip tray
- VAS 5024 Assembly tool for spring-type clamps

Not illustrated:

- VAS 6096 Cooling system charging

Draining

- Open cap on coolant expansion tank.

> Warning !
> Steam can be released when removing the cap from the expansion tank. Cover cap with a cloth and open carefully.

- Remove noise insulation tray.

- Pull off lower coolant hose at radiator using assembly tool for spring-type clamps VAS 5024.

Note:

Observe disposal regulations for coolant!

Filling

Notes:

- Only use coolant additive G 12 in accordance with TL VW 774 F.
  Distinguishing feature: coloured violet
- G 12 violet (in accordance with TL VW 774 F) can be mixed with the previous coolant additive G 12 red!
- G 12 and coolant additives marked "In accordance with TL VW 774 F" prevent frost and corrosion damage, scaling and also raise boiling point of coolant. For this reason the system must be filled all year round with frost and corrosion protection additives.
- Because of its high boiling point, the coolant improves engine reliability under heavy loads, particularly in countries with tropical climates.
- Protection against frost must be assured to about -25 °C (in arctic climatic countries to about -35 °C).
- The coolant concentration must not be reduced by adding water even in warmer seasons and in warmer countries. The anti-freeze ratio must be at least 40 %.
- If for climatic reasons a greater frost protection is required, the amount of G 12 can be increased, but only up to 60 % (frost protection to about -40 °C), as otherwise frost protection is reduced again and cooling effectiveness is also reduced.
- The refractometer T10007 is recommended for determining the current anti-freeze density.
- If radiator, heat exchanger, cylinder head or cylinder head gasket is replaced, do not reuse old coolant.

Recommended mixture ratios:

Frost pro- tec- tion to	Anti-freeze amount	G 121)	Water1)
-25 °C	40 %	2.6 ltr.	3.9 ltr.
-35 °C	50 %	3.25 ltr.	3.25 ltr.

1) The quantity of coolant can vary depending upon the vehicle equipment.

Work sequence

- Secure lower coolant hose on connecting piece of radiator.

With cooling system charging unit VAS 6096:

- Screw adapter from V.A.G 1274 suitable for this vehicle onto expansion tank.

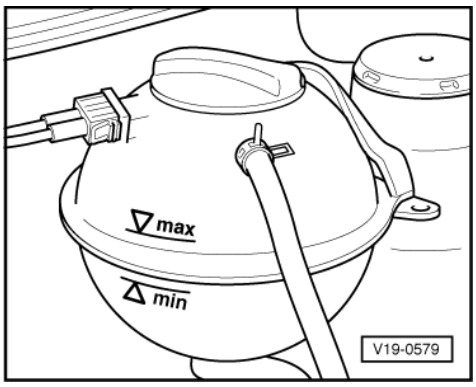

- Fill coolant circuit using cooling system charging unit VAS 6096.

=> Operating instructions for cooling system charging unit VAS 6096

satelettronica

Without cooling system charging unit VAS 6096:

- -> Fill with coolant up to max. mark on expansion tank.
- Fit expansion tank cap.
- Start engine and maintain an engine speed of about 2000 rpm for approx. 3 minutes.
- Run engine until radiator fan cuts-in.
- Check coolant level and top-up if necessary. When the engine is at normal operating temperature, the coolant level must be on the max. mark and between the min. and max. marks when the engine is cold.

1.6 - Removing and installing radiator

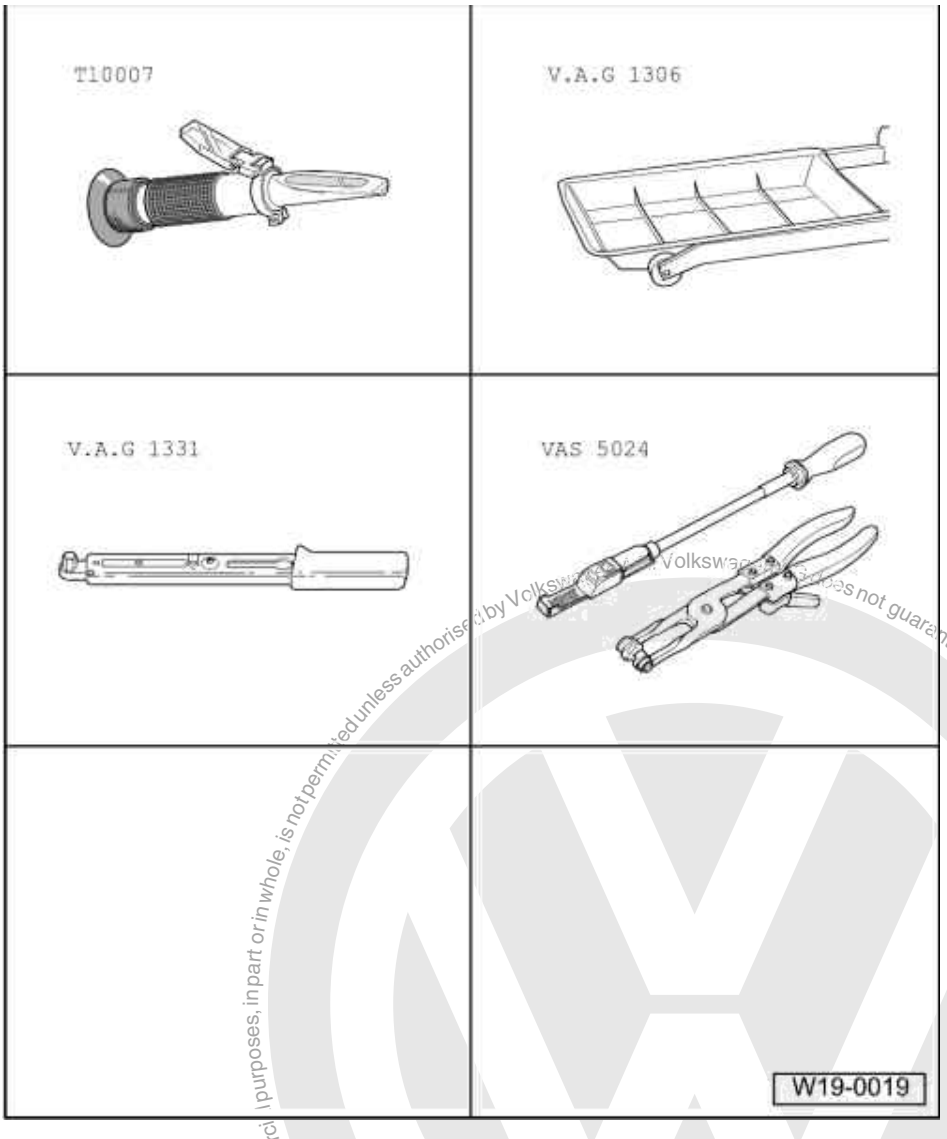

Special tools, workshop equipment, test and measuring appliances and auxiliary items required

- T10007 Refractometer
- V.A.G 1306 Drip tray
- V.A.G 1331 Torque wrench (5...50 Nm)
- VAS 5024 Assembly tool for spring-type clamps

Removing

- Remove noise insulation tray.

satelettronica

- Remove radiator grille and trim.

=> General body repairs, Exterior; Repair group 66; Trim; Removing and installing radiator grille with trim frame Trim Removing and installing radiator grille with trim frame

- Remove left-hand headlight:

=> Electrical system; Repair group 94; Headlights; Assembly overview: Headlight Headlights Assembly overview: Headlight

- Drain coolant => Page 115 .
- Pull coolant hoses off radiator with assembly tool for spring-type clamps VAS 5024.
- Pull connectors off thermo-switch and radiator fan.
- Remove catch plate for bonnet lock.
- Remove radiator securing bolts and take out radiator to the front.

Installing

Installation is carried out in the reverse order, when doing this note the following:

Filling with new coolant => Page 115 .

- Electrical connections and routing:

=> Current flow diagrams, Electrical fault finding and Fitting locations

- Check headlight adjustment and adjust if necessary:

=> Maintenance

Protected by copyright. Copying for private or commercial purposes, in part or in whole, is not permitted unless authorised by Volkswagen AG. Volkswagen AG does not guarantee or accept any liability with respect to the correctness of information in this document. Copyright by Volkswagen AG.

satelettronica

20 - Fuel supply system

1 - Removing and installing parts of fuel supply system

1.1 - Removing and installing parts of fuel supply system

Notes:

- Hose connections are secured with either spring-type or clamp-type clips.
- Always replace clamp-type clips with spring-type clips.
- Assembly tool VAS 5024 or hose clip pliers V.A.G 1921 are recommended for fitting spring-type clips.

Observe safety precautions=> Page 128 .

Observe rules for cleanliness => Page 129 .

Removing and installing fuel tank with its attachments => Page 120 .

Servicing fuel filter => Page 126 .

Protected by copyright. Copying for private or commercial purposes, in part or in whole, is not permitted unless authorised by Volkswagen AG. Copyright by Volkswagen AG. We do not guarantee or accept any liability with respect to the correctness of information in this document.
satelettronica

1.2 - Removing and installing fuel tank with its attachments

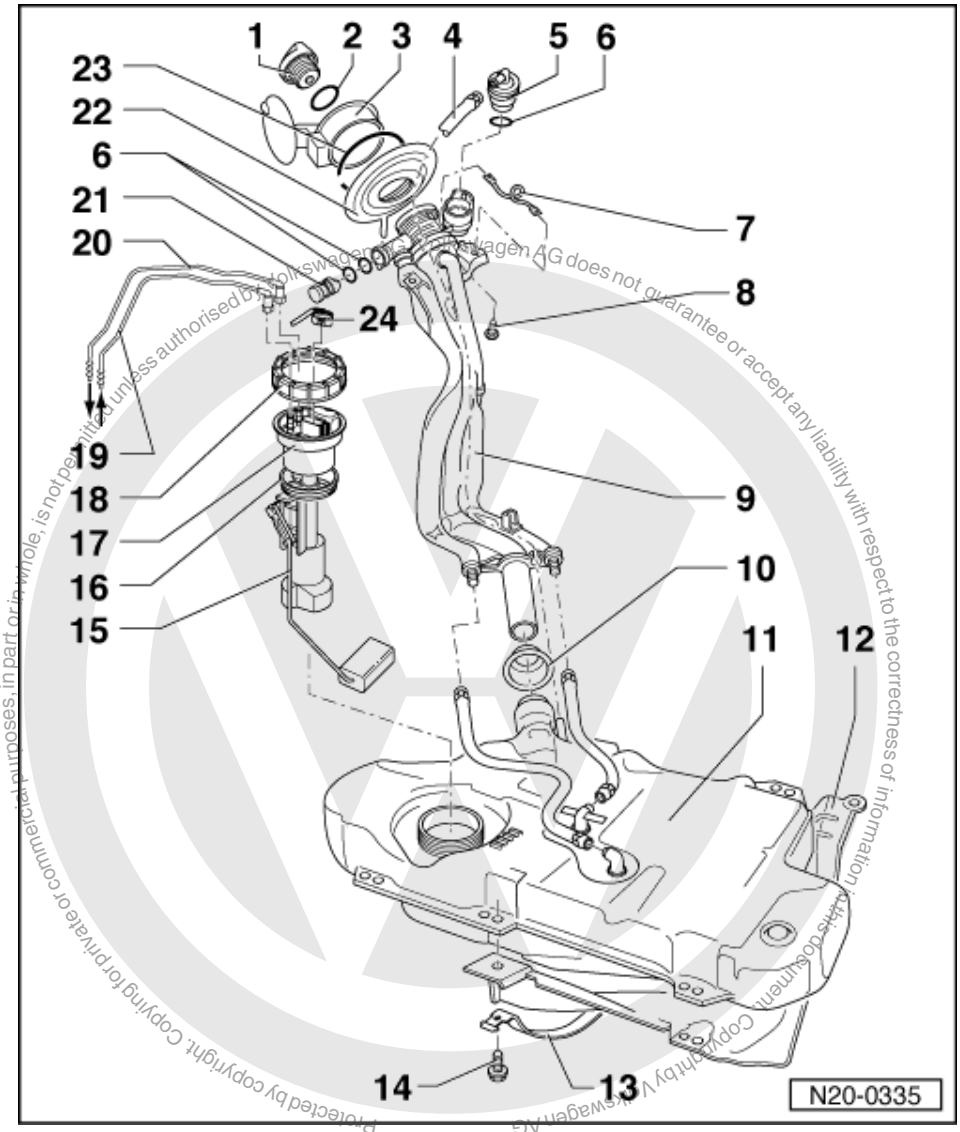

1 Cap
2 Seal
- Renew if damaged

3 Tank flap unit
- Removing and installing

=> General body repairs, Exterior; Repair group 55; Tank flap unit Tank flap unit

4 Vent pipe

5 Gravity/overflow valve
- To remove, release locking lug and unclip valve upwards out of filler neck
- Check valve for through-flow
  valve vertical: open,
  valve tilted 45 °: closed

satelettronica

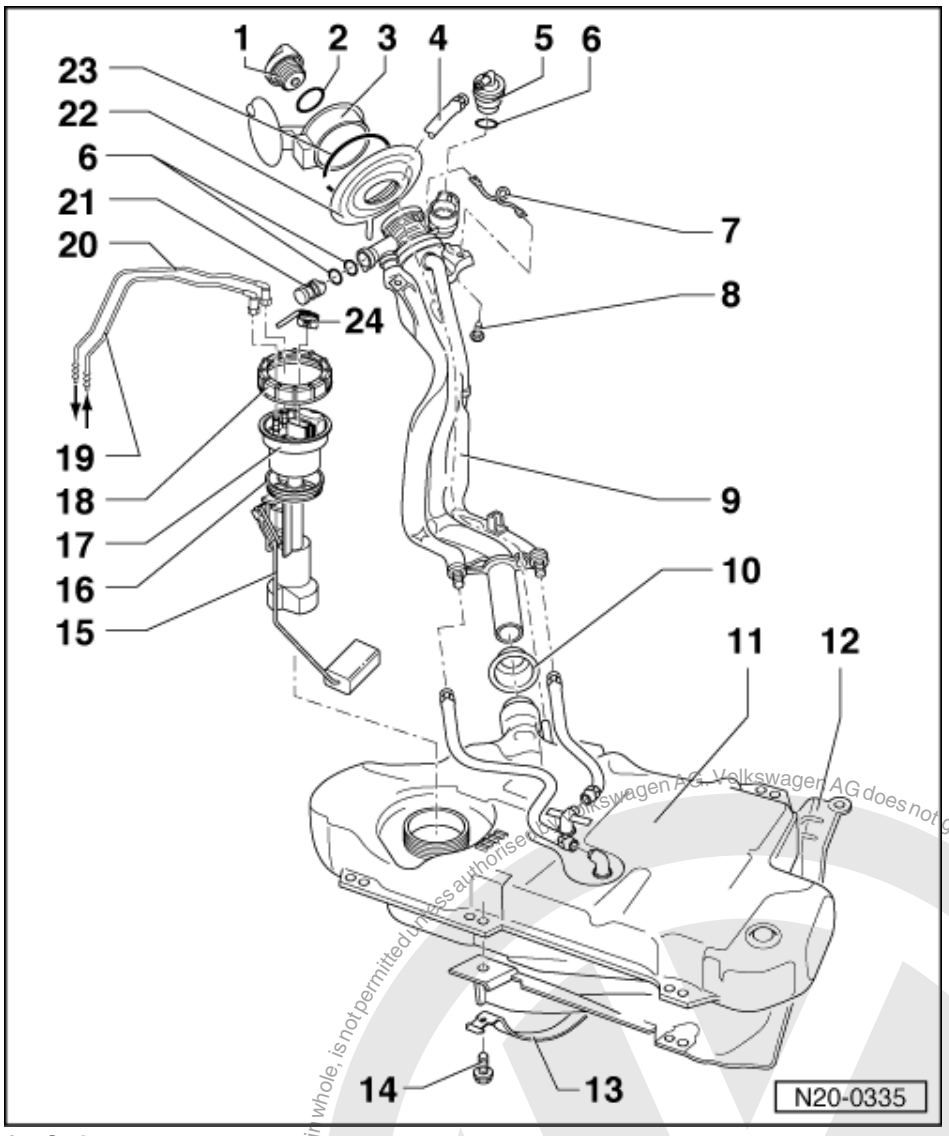

6 O-ring
- Renew if damaged

7 Earth connection
- Check securely seated

8 4 Nm

9 Filler pipes
- With non-return valve

10 Sealing boot
- After installing filler pipes fit over fuel tank connections, having turned boot inside out

11 Fuel tank
- Support with engine/gearbox jack V.A.G 1383 A when removing
- Removing and installing
  => Page 129

12 Heat shield
- Press clamping washer from heat shield tightly onto pins on vehicle floor

satelettronica
Protected by copyright. Copying for private or commercial purposes, in part or in whole, is not permitted unless authorised by Volkswagen AG. Volkswagen AG does not guarantee or accept any liability with respect to the correctness of information in this document. Copyright by Volkswagen AG.

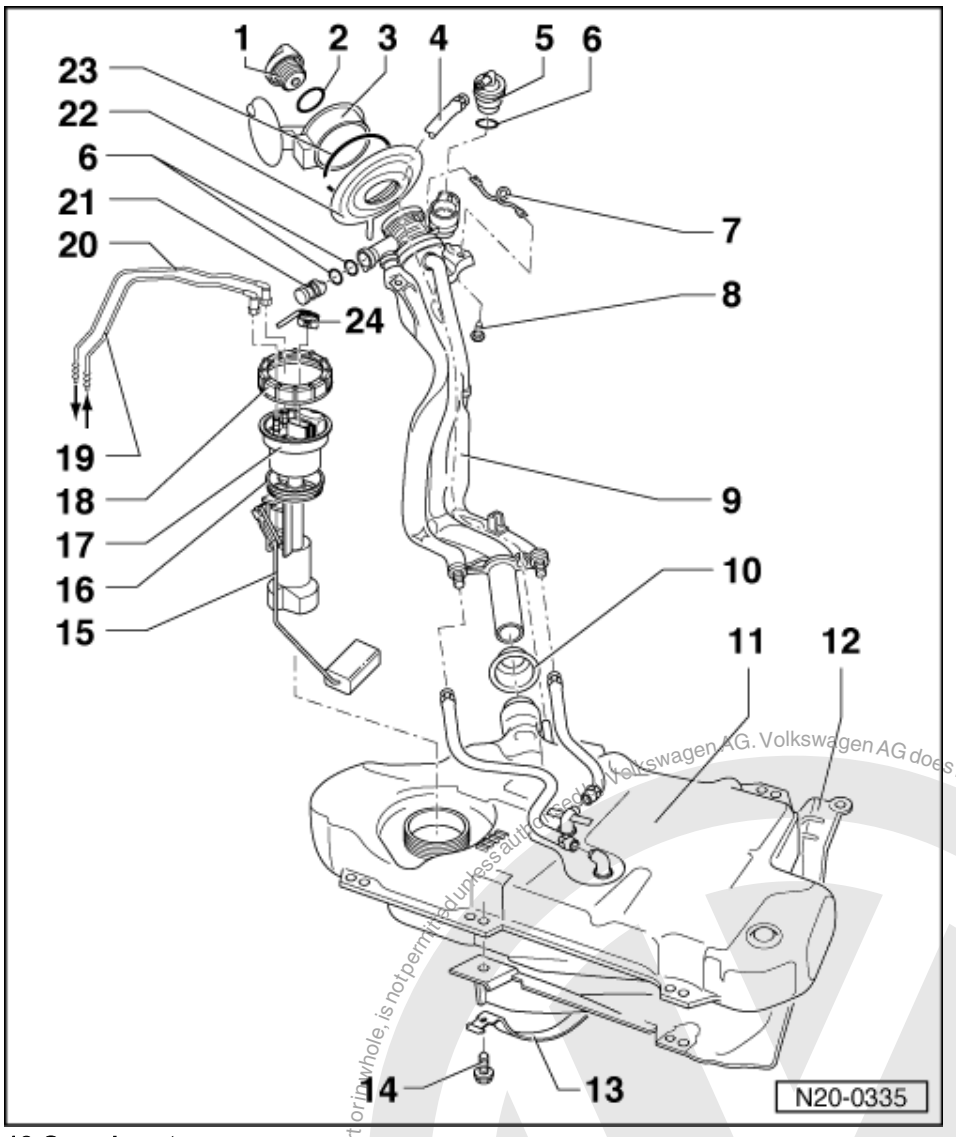

13 Securing strap
- Note differing length

14 25 Nm

15 Fuel gauge sender (G)
- Note fitting position on fuel tank => Fig. 1
- Sender with strainer telescopic to upper part

16 Sealing ring
- Renew if damaged
- Coat with fuel when installing

17 Flange
- Note fitting position on fuel tank => Fig. 1

18 Union nut
- Remove and install using union nut spanner 3217 or 3218

Protected by copyright. Copying for private or commercial purposes, in part or in whole, is not permitted unless authorised by Volkswagen AG. Volkswagen AG does not guarantee or accept any liability with respect to the correctness of information in this document. Copyright by Volkswagen AG.
satelettronica

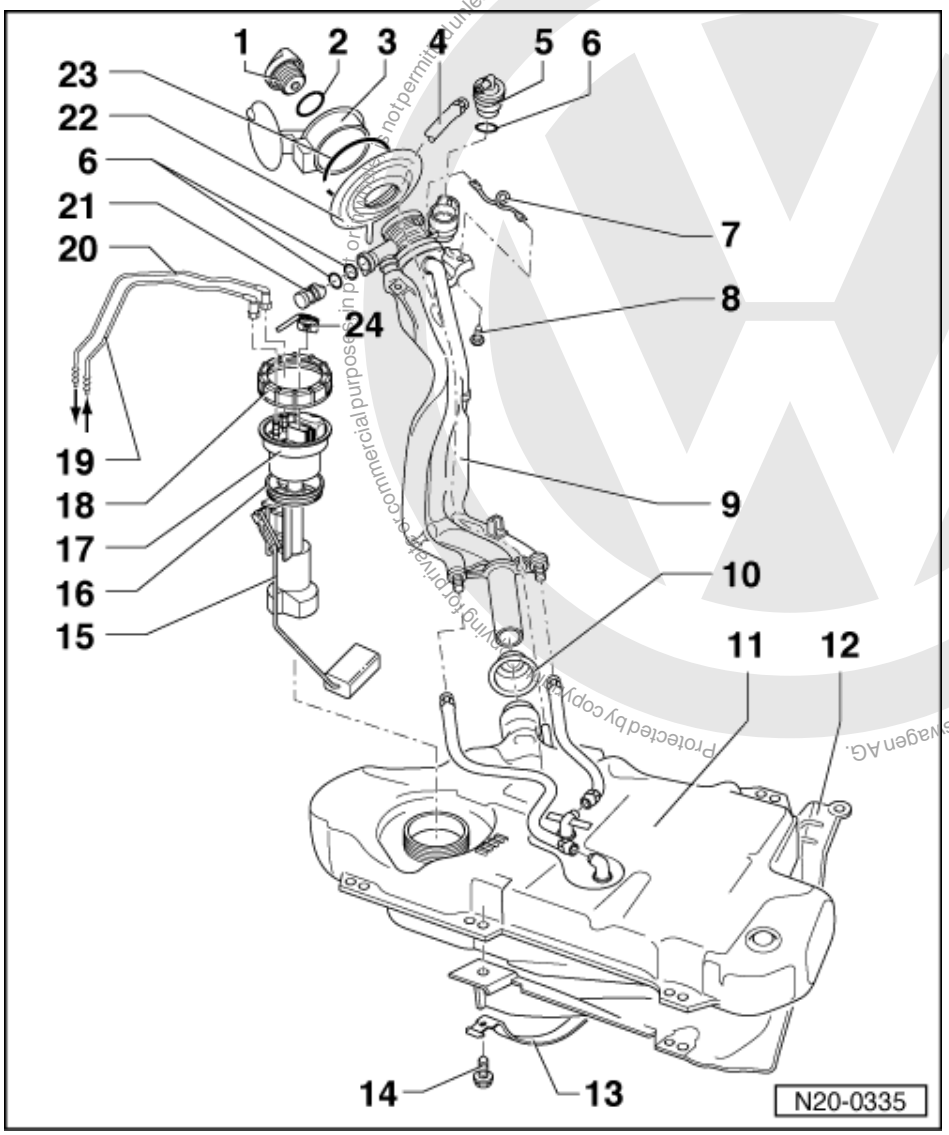

19 Return pipe

- To fuel filter
  => Page 126 , item 2
- Blue or with blue marking
- Clipped onto fuel tank
- Check securely seated
- To remove from flange, press release button on connecting piece or loosen clamping collar

20 Supply pipe

- To fuel filter
  => Page 126 , item 1
- Black
- Clipped onto fuel tank
- Check securely seated
- To remove from flange, press release button on connecting piece or loosen clamping collar

satelettronica

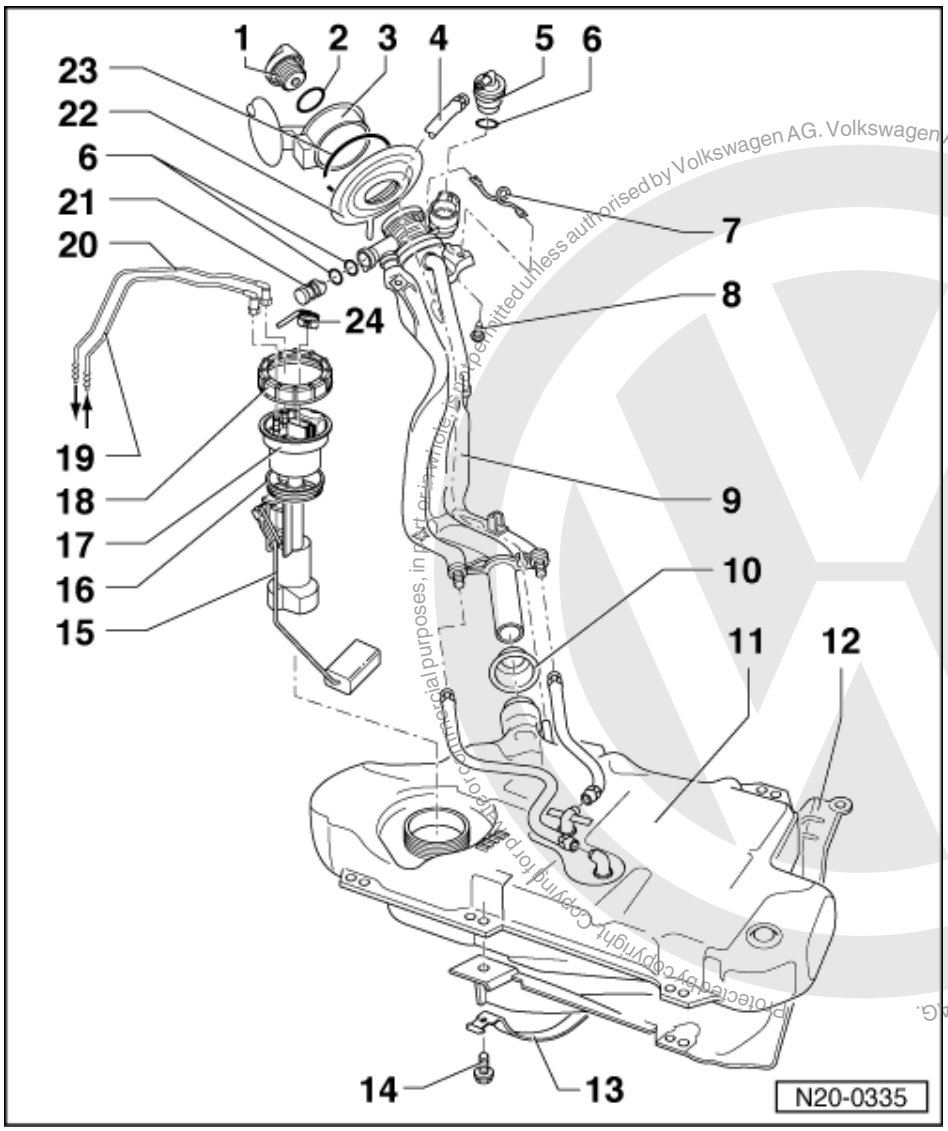

21 Vent valve
- Checking =>Fig. 2
- To remove valve unclip sideways out of support
- Before installing remove sealing cap

22 Cup
- For filler pipes

23 Retaining ring

24 Connector
- Black, 2-pin

Protected by copyright. Copying for private or commercial purposes, in part or in whole, is not permitted unless authorised by Volkswagen AG. Volkswagen AG does not guarantee or accept any liability with respect to the correctness of information in this document. Copyright by Volkswagen AG.
satelettronica

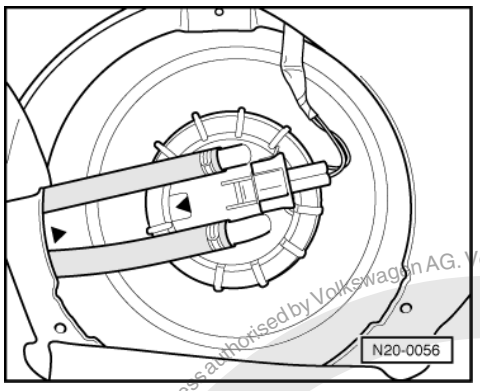

-> Fig. 1 Installation position of fuel gauge sender

Marking on the flange must align with marking on the fuel tank.

Note:

After installing sender, ensure that the fuel pipes are still securely clipped onto fuel tank.

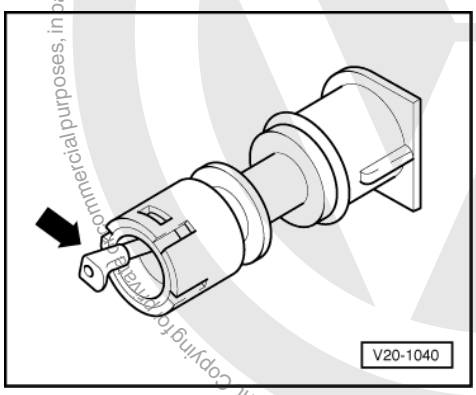

-> Fig. 2 Checking vent valve

Lever in rest position: Closed

Lever pushed in direction of arrow: Open

Note:

Before installing vent valve remove fuel tank cap.

Protected by copyright. Copying for commercial purposes, in part or in whole, is not permitted unless authorised by Volkswagen AG. Volkswagen AG does not guarantee or accept any liability with respect to the correctness of information in this document. Copyright by Volkswagen AG.
satelettronica

1.3 - Servicing fuel filter

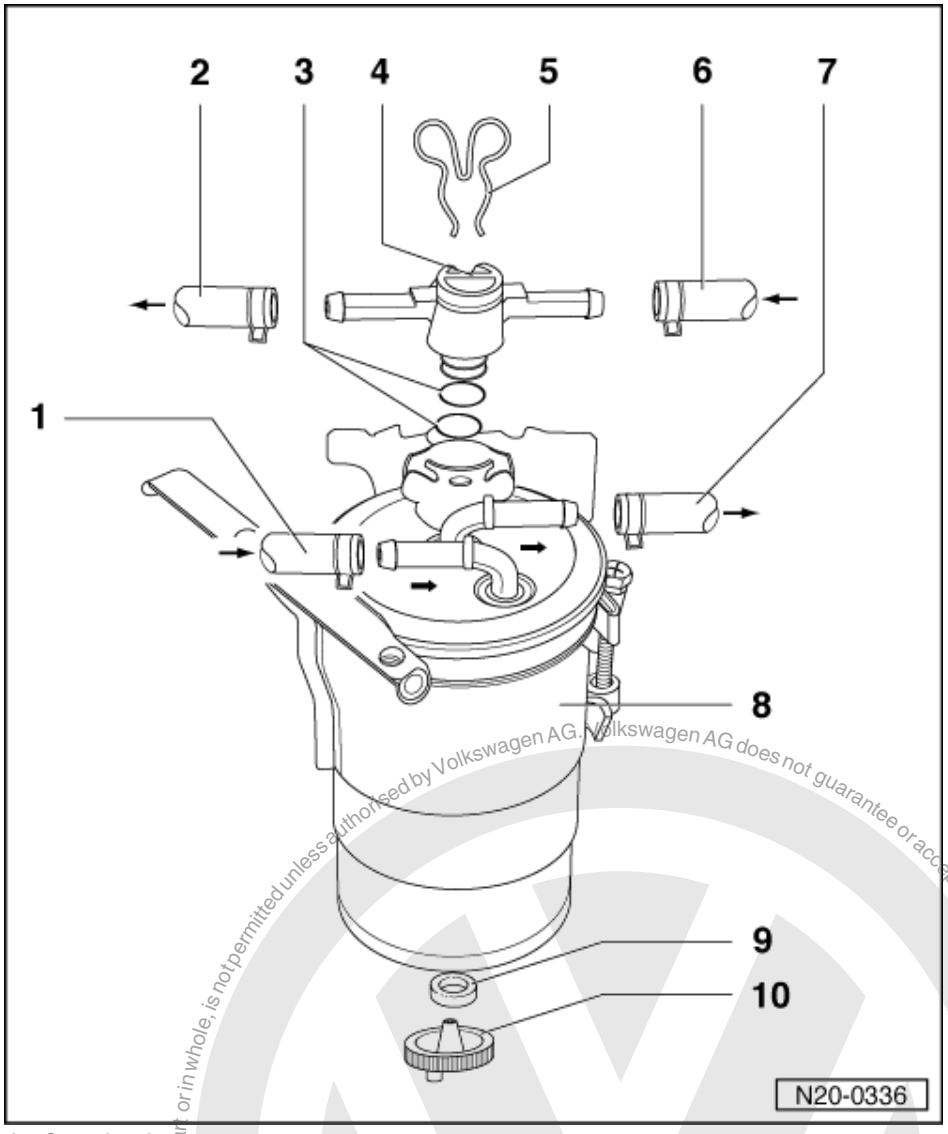

1 **Supply pipe**
- From fuel tank
  => Page 123 , item 20
- Clipped onto bulkhead
- White or with white marking
- Check securely seated

2 **Return pipe**
- From fuel tank
  => Page 123 , item 19
- Clipped onto bulkhead
- Blue or with blue marking
- Check securely seated

3 **O-ring**
- Renew

Protected by copyright. Copyright by Volkswagen AG.
Copyright by Volkswagen AG. Volkswagen AG does not guarantee or accept any liability with respect to the correctness of information in this document.
Copying for private or commercial purposes, in part or in whole, is not permitted unless authorised by Volkswagen AG.
satelettronica

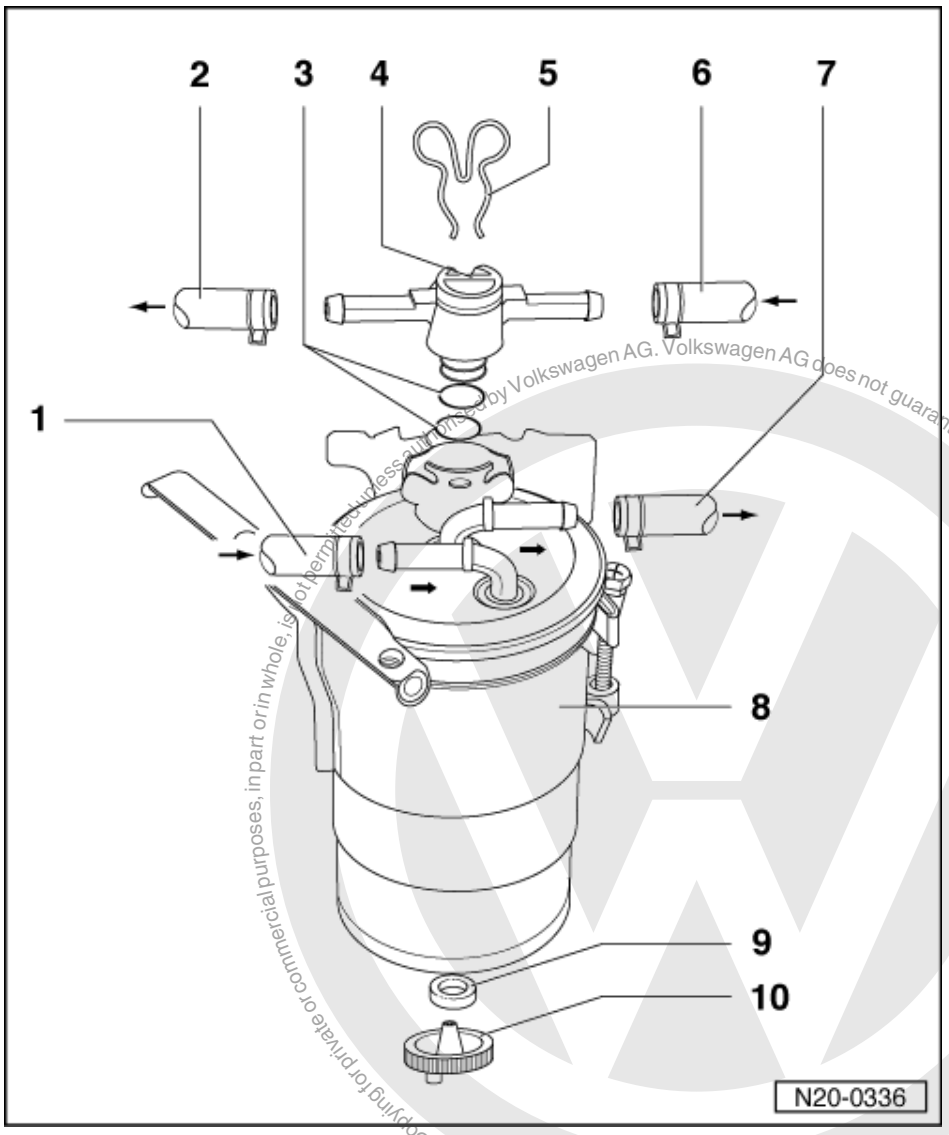

4 Control valve
- Installation position: arrow points towards fuel tank
- When changing filter, remove securing clip and take control valve off complete with fuel pipes
- Below + 15 °C:
  Passageway to filter open
- Over + 31 °C:
  Passageway to filter closed

5 Securing clip
- Check securely seated

6 Return pipe
- From injection pump
- Blue or with blue marking
- Check securely seated

7 Supply pipe
- To injection pump
- White or with white marking
- Check securely seated

Copyright by Volkswagen AG. Volkswagen AG does not guarantee or accept any liability with respect to the correctness of information in this document. Copyright by Volkswagen AG. Protected by copyright. Copying for private or commercial purposes, in part or in whole, is not permitted unless authorised by Volkswagen AG.
satelettronica

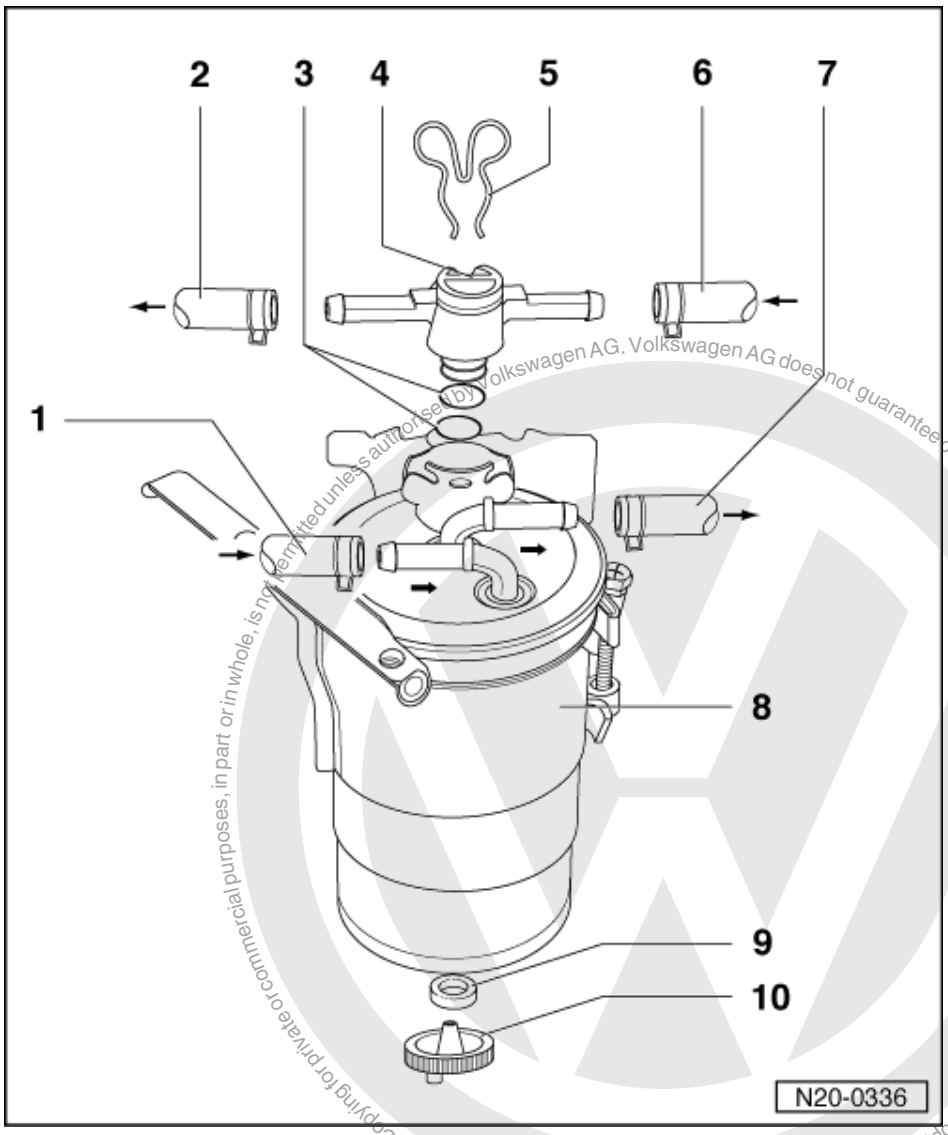

Protected by copyright. Copying for private or commercial purposes, in part or in whole, is not permitted unless authorised by Volkswagen AG. Volkswagen AG does not guarantee or accept any liability with respect to the correctness of information in this document. Copyright by Volkswagen AG.

satelettronica

8 Fuel filter
- Fill with diesel before installing
- Flow direction is marked by an arrow
- Do not interchange connections
- Renew if damaged

9 Seal
- Renew if damaged

10 Water drain plug
- To bleed remove securing clip and take control valve off complete with fuel pipes attached
- Loosen and allow approx. 100 cm3 fluid to drain

1.4 - Safety precautions when working on the fuel supply system

When removing and installing the fuel gauge sender from a full or partly full fuel tank the following must be observed:

- Before commencing work, switch on exhaust extraction system and place an extraction hose close to the sender opening in the fuel tank to extract escaping fuel fumes.
  If no exhaust extraction system is available, a radial fan (as long as motor is not in air flow) with a displacement greater than 15 m3/h can be used.

- Prevent skin contact with fuel! Wear fuel-resistant gloves!

1.5 - Rules for cleanliness

When working on the fuel supply/injection system, pay careful attention to the following "6 rules":

- Thoroughly clean all unions and the adjacent areas before disconnecting.
- Place parts that have been removed on a clean surface and cover. Do not use fluffy cloths!
- Carefully cover opened components or seal, if the repair cannot be carried out immediately.
- Only install clean components:
  Only unpack replacement parts immediately prior to installation.
  Do not use parts that have been stored loose (e.g. in tool boxes etc.).
- When the system is open:
  Do not work with compressed air if this can be avoided.
  Do not move vehicle unless absolutely necessary.
- Also ensure that no diesel fuel runs onto the coolant hoses. Hoses coming in contact with fuel must be cleaned immediately. Damaged hoses must be replaced.

1.6 - Removing and installing fuel tank

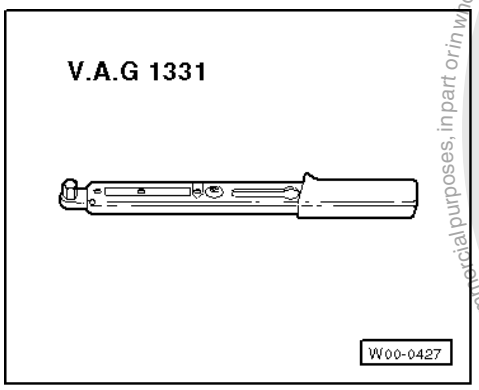

Special tools, workshop equipment, testers, measuring instruments and auxiliary items required

- V.A.G 1331 Torque wrench (5...50 Nm)

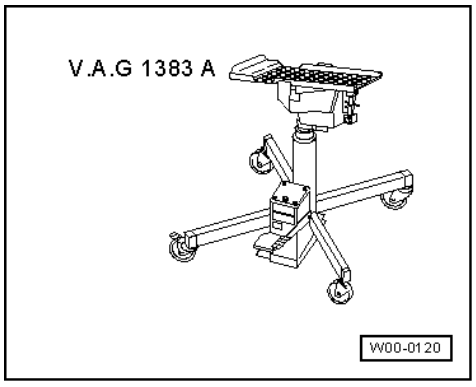

- V.A.G 1383 A Engine/gearbox jack

Removing

- Note safety precautions before starting work
  => Page 128

Protected by copyright. Copying for private or commercial purposes, in part or in whole, is not permitted unless authorised by Volkswagen AG. Volkswagen AG does not guarantee or accept any liability with respect to the correctness of information in this document. Copyright by Volkswagen AG.
satelettronica

Note:

Check whether a coded radio is installed as during the forthcoming work sequences the battery earth strap must be disconnected. Obtain radio code first if necessary.

- With the ignition switched off disconnect battery earth strap.
- Fold rear seat bench forwards.
- Remove cover plate from fuel gauge sender and pull connector off flange.
- Pull fuel supply and return pipes off flanges.
- Seal the pipes so that the fuel system is not contaminated by dirt etc.
- Open fuel flap.
- Drain fuel tank and clean area around filler neck.
- Unhook front and rear silencers and if necessary tie to body with wire.
- Remove rear right wheel.
- Detach filler pipe from body.
- Take filler cap off filler neck and detach filler neck from cup.
- Remove tensioning strap. When doing this support fuel tank with engine/gearbox jack V.A.G 1383 A.
- Remove filler pipe.
- Take out fuel tank together with heat shield.

Installing

Install in reverse order but note following:

- Route breather hose kink free.
- Do not interchange supply and return hose (return hose blue or blue markings, supply hose black).
- Ensure fuel hoses are seated securely.
- Clip supply and return pipe onto fuel tank.

Protected by copyright. Copying for private or commercial purposes, in part or in whole, is not permitted unless authorised by Volkswagen AG. Volkswagen AG does not guarantee or accept any liability with respect to the correctness of information in this document. Copyright by Volkswagen AG.
satelettronica

2 - Accelerator mechanism: Engine code AEF

2.1 - Accelerator mechanism: Engine code AEF

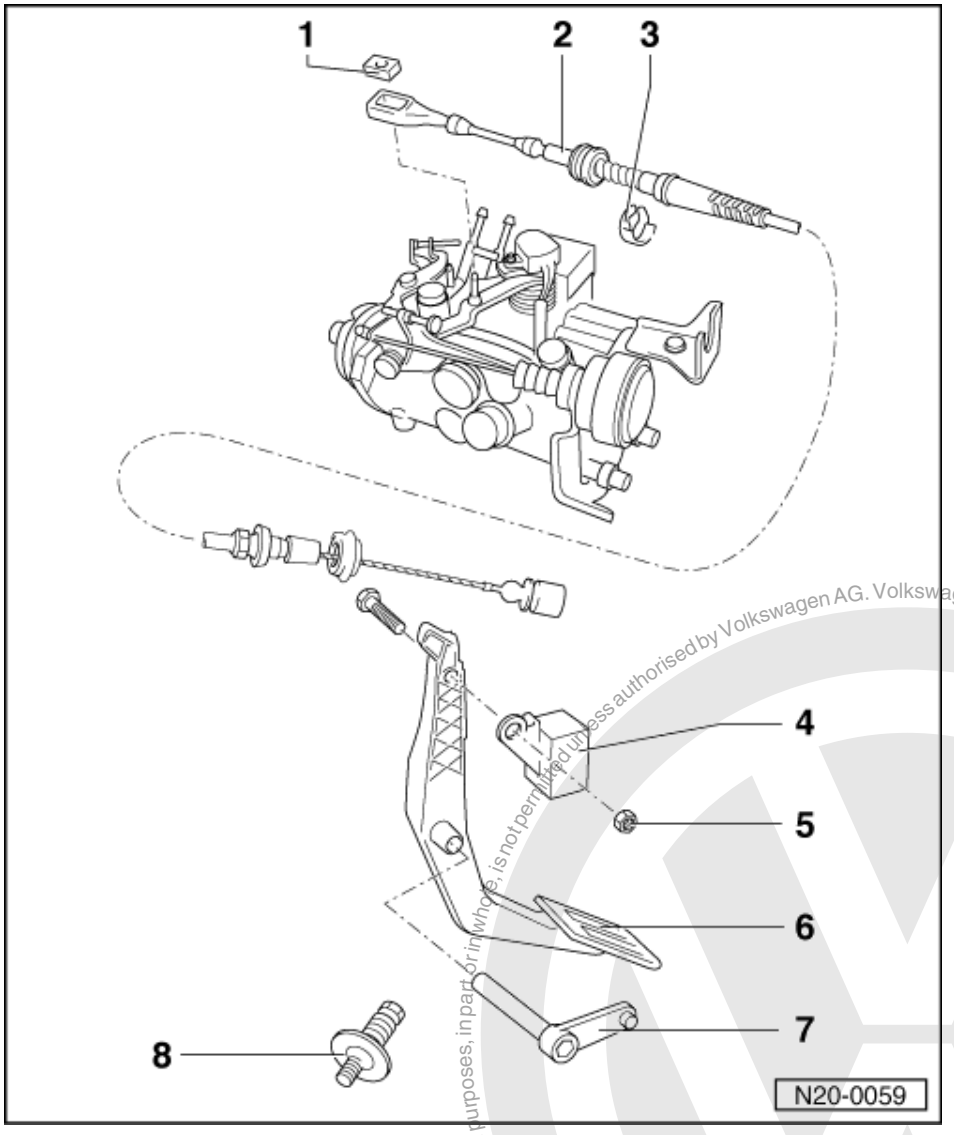

2.2 - Servicing accelerator mechanism

1 Securing rubber
- Renew if damaged

2 Accelerator cable
- Adjust by moving position of securing clip on grooves in outer cable => Fig. 1

3 Securing clip
- Check securely seated

4 Balance weight

5 10 Nm

6 Accelerator pedal

Protected by copyright. Copying for private or commercial purposes, in part or in whole, is not permitted unless authorised by Volkswagen AG. Volkswagen AG does not guarantee or accept any liability with respect to the correctness of information in this document. Copyright by Volkswagen AG.
satelettronica

- Removing and installing => Fig. 2

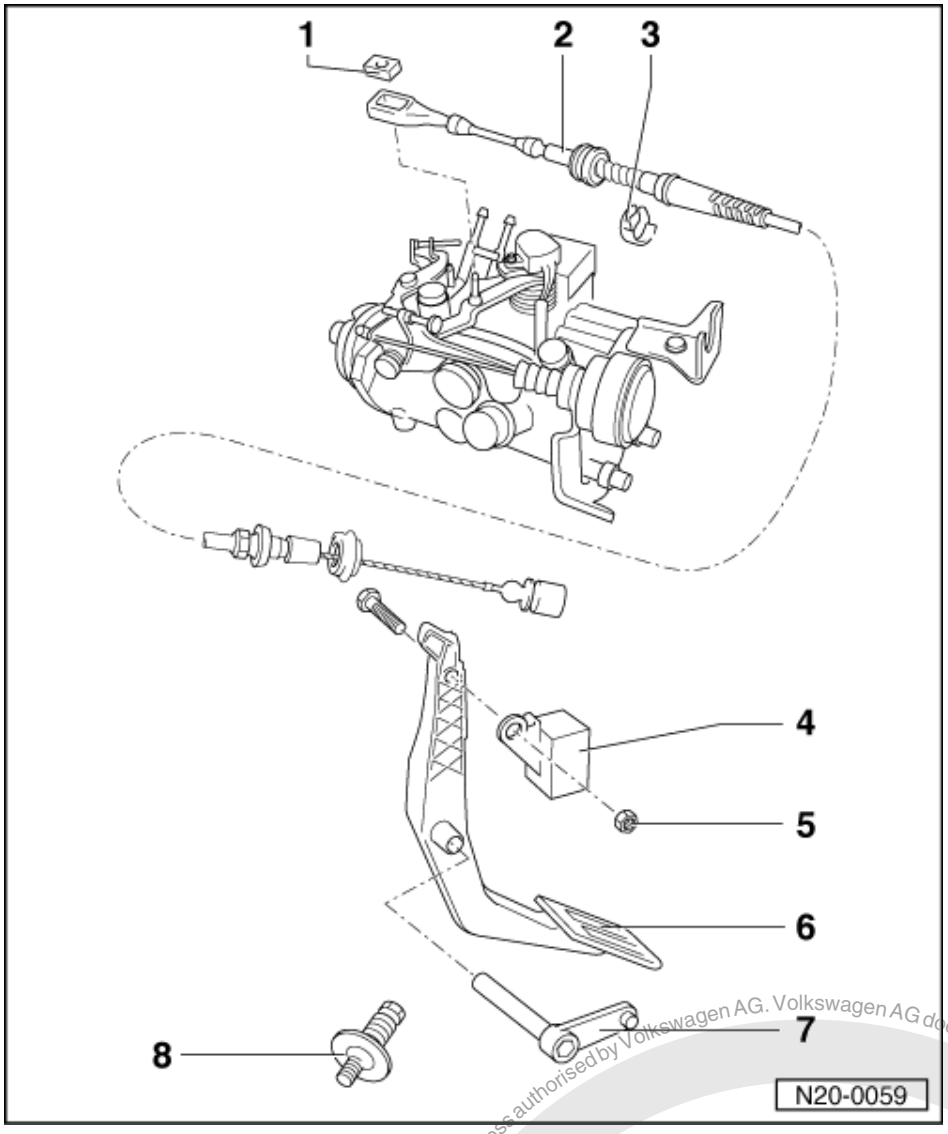

7 Accelerator pedal pin
8 Accelerator pedal stop

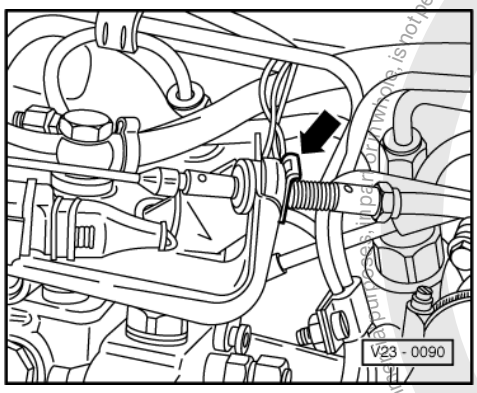

satelettronica
Protected by copyright. Copying for private or commercial purposes, in part or in whole, is not permitted unless authorised by Volkswagen AG. Volkswagen AG does not guarantee or accept any liability with respect to the correctness of information in this document. Copyright by Volkswagen AG.

-> Fig. 1 Adjusting accelerator cable

With the accelerator cable in full throttle position, adjust cable by positioning the securing clip -arrow- in the outer cable grooves, so that the injection pump lever just contacts the stop and is not under stress.

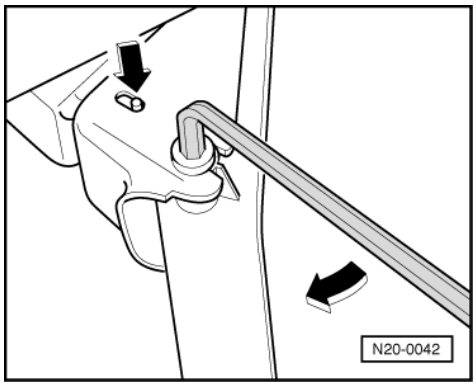

-> Fig. 2 Removing and installing accelerator pedal

To remove the accelerator pedal, press the accelerator pedal shaft locking device carefully out of the drilling -arrow-, then turn the shaft with a 6 mm hexagon key until it can be pulled out.

Protected by copyright. Copying for private or commercial purposes, in part or in whole, is not permitted unless authorised by Volkswagen AG. Volkswagen AG does not guarantee or accept any liability with respect to the correctness of information in this document. Copyright by Volkswagen AG.
satelettronica

3 - Accelerator mechanism: > 09.99 (Engine codes AGD, AHG, AKU)

3.1 - Accelerator mechanism: > 09.99 (Engine codes AGD, AHG, AKU)

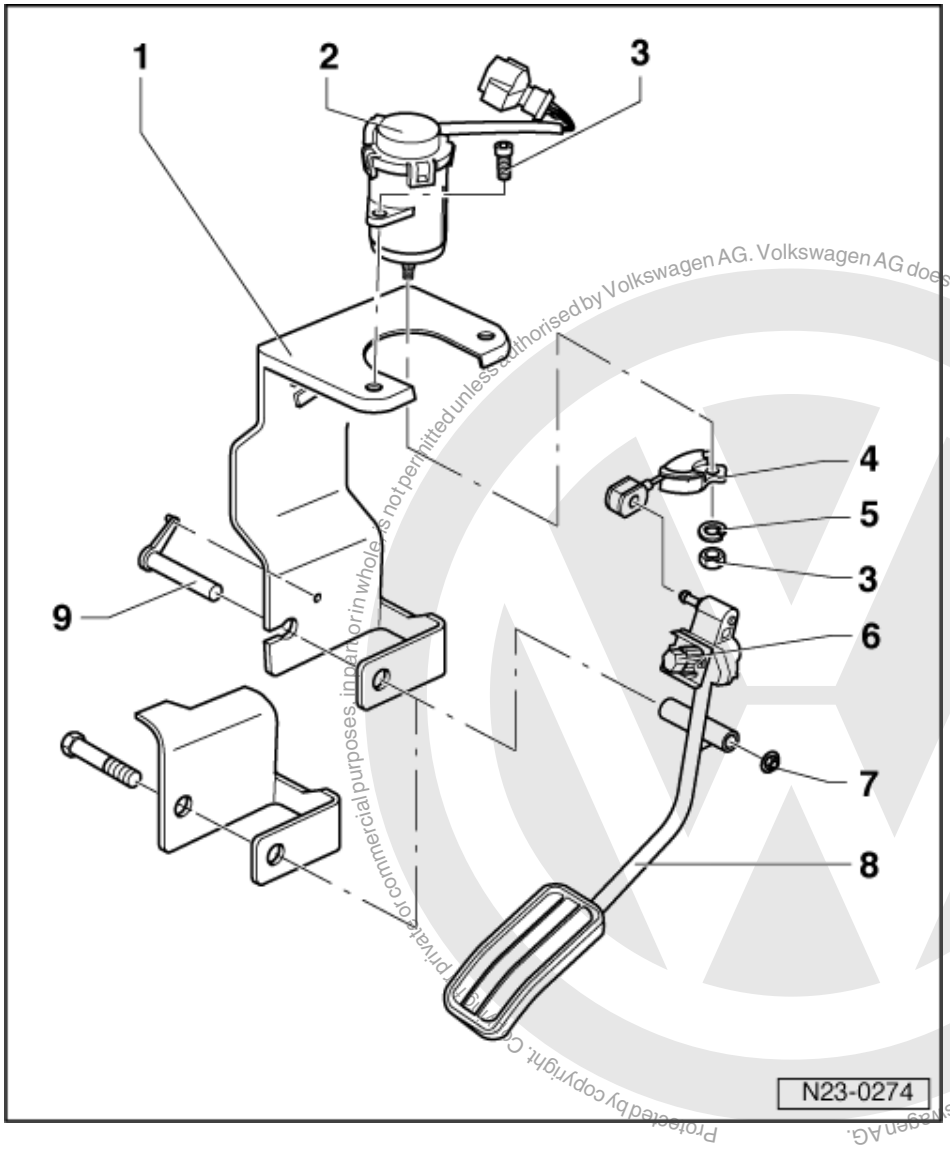

Protected by copyright. Copyright by Volkswagen AG.
Private or commercial purposes, in part or in whole, is not permitted unless authorised by Volkswagen AG. Volkswagen AG does not guarantee or accept any liability with respect to the correctness of information in this document.
satelettronica

3.2 - Servicing accelerator mechanism

Vehicles with left-hand drive

Vehicles with right-hand drive

=> Page 146

1 **Bracket**

2 **Accelerator pedal position sender (G79)**

- The accelerator pedal position passes the position of the pedal on to the engine control unit
- Remove footwell cover to remove sender
- Adjusting =>Page 136
- Checking =>Page 138

3 **10 Nm**

4 **Cable cam**

- Installing => Fig. 1

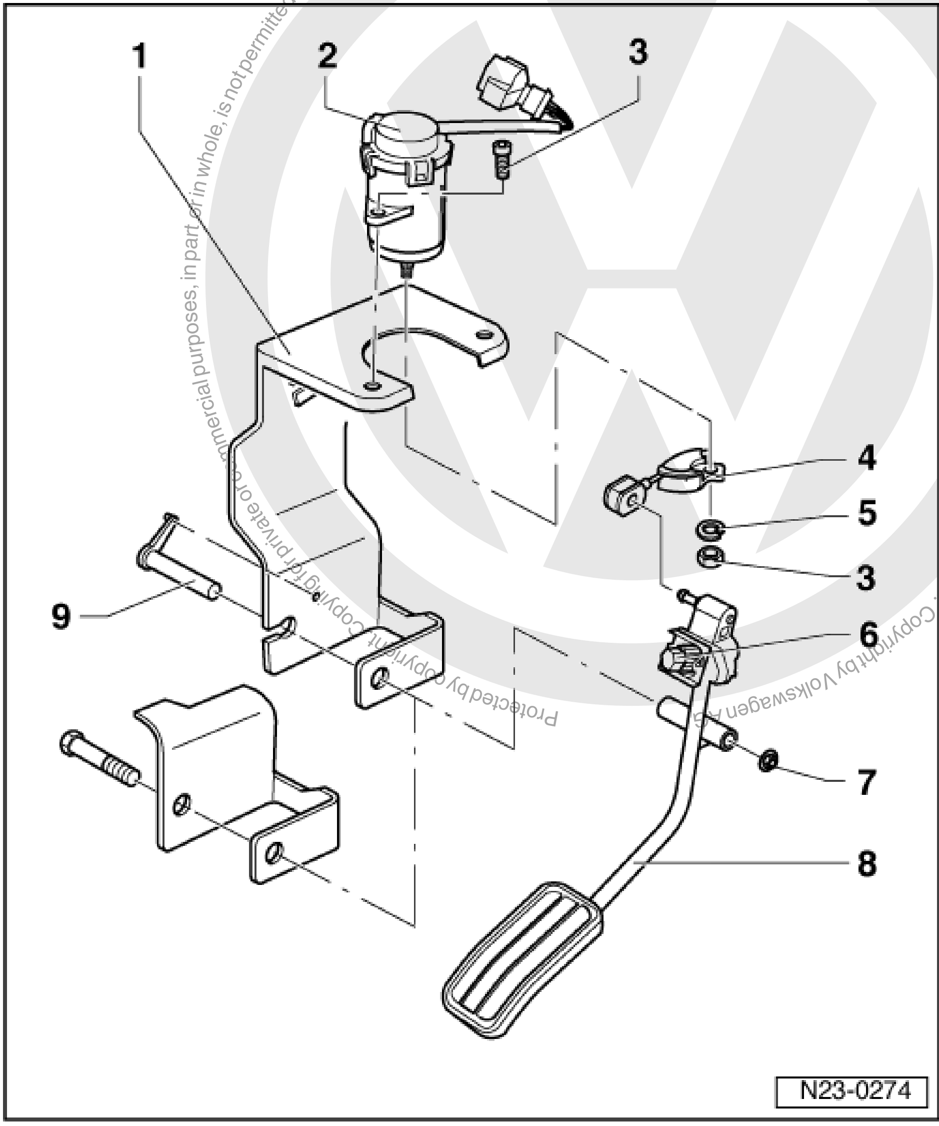

Protected by copyright. Copying for private or commercial purposes, in part or in whole, is not permitted unless authorised by Volkswagen AG. Volkswagen AG does not guarantee or accept any liability with respect to the correctness of information in this document. Copyright by Volkswagen AG.

5 Spring washer

6 Adjustment bolt

- Adjusting =>Page 136

7 20 Nm

8 Accelerator pedal

- Removing and installing => Fig. 2

9 Accelerator pedal

satelettronica

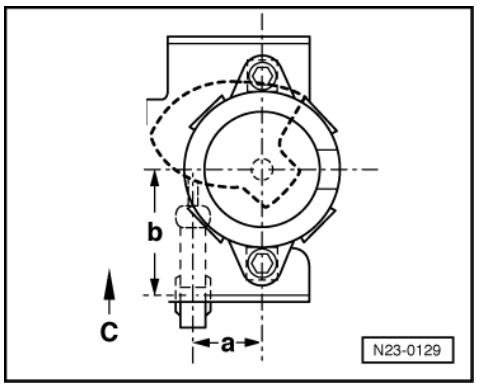

-> Fig.1 Installing cable cam

- Secure cable cam to sender so that the dimensions shown are adhered to when facing forwards.
  a = 22 ±0.05 mm
  b = 41±0.05 mm
  c = Forwards

Note:

The cable cam eye must be parallel to the forward direction.

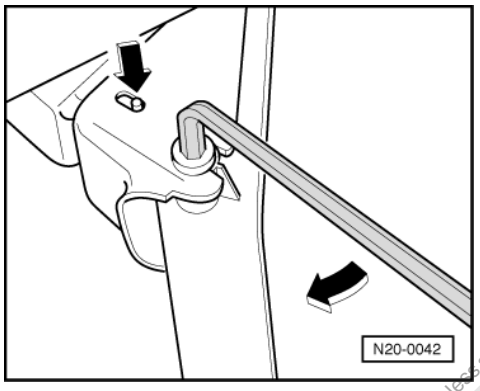

-> Fig. 2 Removing and installing accelerator pedal

To remove the accelerator pedal, press the accelerator pedal shaft locking device carefully out of the drilling -arrow-, then turn the shaft with a 6 mm hexagon key until it can be pulled out.

3.3 - Checking accelerator pedal position sender adjustment

Special tools, workshop equipment, testers, measuring instruments and auxiliary items required

- Fault reader V.A.G 1551 (or vehicle system tester V.A.G 1552) with cable V.A.G 1551/3

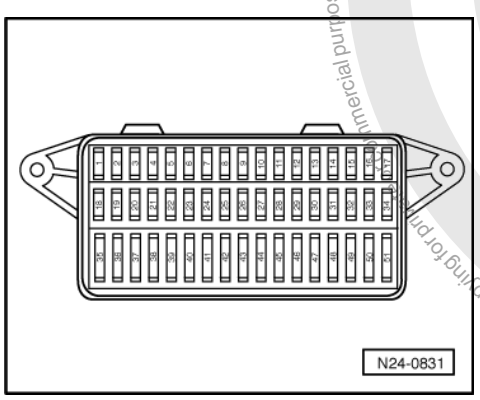

Protected by copyright. Copying for private or commercial purposes, in part or in whole, is not permitted unless authorised by Volkswagen AG. Volkswagen AG does not guarantee or accept any liability with respect to the correctness of information in this document. Copyright by Volkswagen AG.
satelettronica

Check conditions

- Fuses must be OK.
- The battery voltage must be at least 11.5 V.

Test sequence

- Connect fault reader V.A.G 1551 (V.A.G 1552) and with ignition switched on select engine electronics control unit with the "Address word" 01:

=> Repair group 01; Self-diagnosis; Connecting fault reader V.A.G 1551 and selecting engine electronics control unit Self-diagnosis Connecting fault reader V.A.G 1551 and selecting engine electronics control unit

-> Indicated on display:

```
Rapid data transfer      HELP
Select function XXX
```

- Press keys 0 and 8 for the function "Read measured value block" and confirm entry with Q key.

-> Indicated on display:

```
Read measured value block
Input display group number XXX
```

- Press keys 0, 0 and 2 for "Display group number 2" and confirm entry with Q key.

```
Read measured value block 2
0 rpm     0.0 %     0     1     0     18.4 5C
```

-> Check accelerator pedal position display in display zone 2. The accelerator pedal must not be depressed.
Specification: 0.0 %

```
Read measured value block 2
0 rpm     100.0 %     0     0     0
18.4 5C
```

-> Depress accelerator pedal slowly until fully down and observe display zone 2. The value for the accelerator pedal position must increase continuously and reach
100.0 %
shortly before full throttle stop.

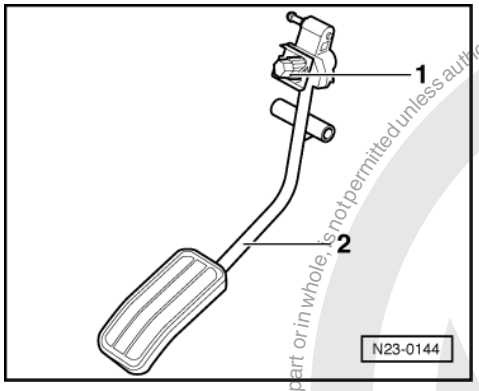

- -> If necessary, adjust accelerator pedal -2- by turning the adjustment screw -1- so that when accelerator pedal is not depressed (idling position)
0.0 %
is displayed, and with accelerator pedal depressed to just before full throttle position,
100.0 %.

Protected by copyright. Copying for private or commercial purposes, in part or in whole, is not permitted unless authorised by Volkswagen AG. Volkswagen AG does not guarantee or accept any liability with respect to the correctness of information in this document. Copyright by Volkswagen AG.
satelettronica

3.4 - Checking accelerator pedal position sender

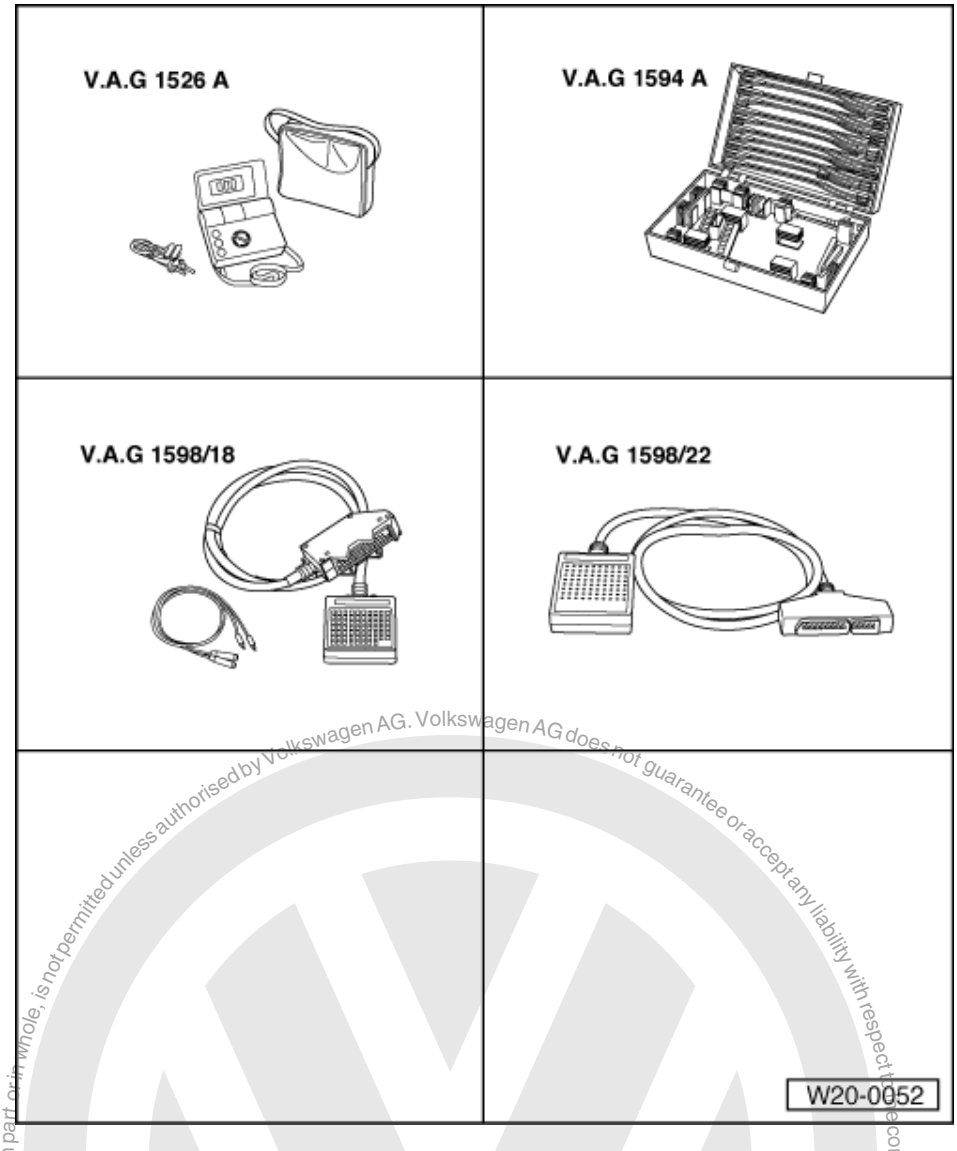

Special tools, workshop equipment, test and measuring appliances and auxiliary items required

- V.A.G 1526 A Hand multimeter or multimeter V.A.G 1715
- V.A.G 1594 A Adapter set
- V.A.G 1598/18 Test box
  for 68-pin control unit
- V.A.G 1598/22 Test box
  for 80-pole control unit
- Fault reader V.A.G 1551 or vehicle system tester V.A.G 1552 with cable V.A.G 1551/3
- Current flow diagram

Function

The accelerator pedal position sender is located on accelerator pedal and passes driver's requirement (pedal position) on further to the control unit.

Protected by copyright. Copying for commercial purposes, in part or in whole, is not permitted unless authorised by Volkswagen AG. Volkswagen AG does not guarantee or accept any liability with respect to the correctness of information in this document. Copyright by Volkswagen AG.

satelettronica

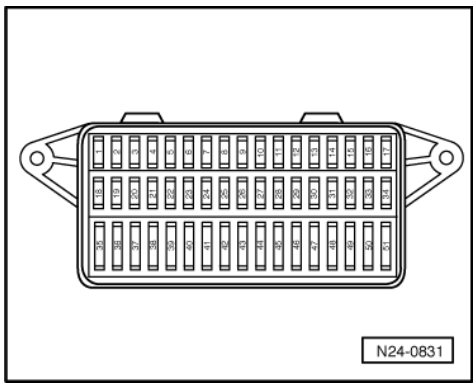

Check conditions

- Fuses must be OK.
- The battery voltage must be at least 11.5 V.

Test sequence

- Connect fault reader V.A.G 1551 (V.A.G 1552) and with ignition switched on select engine electronics control unit with the "Address word" 01:

=> Repair group 01; Self-diagnosis; Connecting fault reader V.A.G 1551 and selecting engine electronics control unit Self-diagnosis Connecting fault reader V.A.G 1551 and selecting engine electronics control unit

-> Indicated on display:

```
Rapid data transfer      HELP
Select function XXX
```

- Press keys 0 and 8 for the function "Read measured value block" and confirm entry with Q key.

-> Indicated on display:

```
Read measured value block
Input display group number XXX
```

- Press keys 0, 0 and 2 for "Display group number 2" and confirm entry with Q key.

```
Read measured value block 2
0 rpm     0.0 %     0     1     0     18.4 5C
```

-> Check accelerator pedal position display in display zone 2. The accelerator pedal must not be depressed.
Specification: 0.0 %

- Also check the idling speed switch display in display zone 3. The centre position must show 1.
  Display: 0 1 0

```
Read measured value block 2
0 rpm     100.0 %     0     0     0
18.4 5C
```

-> Slowly depress accelerator pedal until fully down and observe display zones 2 and 3.

- Display zone 2:
  The accelerator pedal position figure must increase continuously.
  Specification at full throttle position: 100.0 %
- Display zone 3:
  The centre position must change to 0.
  Display: 0 0 0

End specification value not achieved:

- Adjust accelerator pedal position sender
  =>Page 136

Display does not change or is erratic:

Protected by copyright. Copying for private or commercial purposes, in part or in whole, is not permitted unless authorised by Volkswagen AG. Volkswagen AG does not guarantee or accept any liability with respect to the correctness of information in this document. Copyright by Volkswagen AG.
satelettronica

- Check accelerator pedal position sender wiring as follows:
- Press the ⇒key.

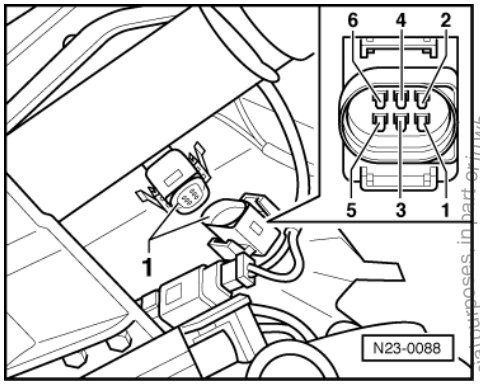

- Press keys 0 and 6 for the function "End output" and confirm entry with the Q key.
- Switch off ignition.
- Remove cover in footwell (driver's side).
- -> Disconnect 6-pin connector -1- for accelerator pedal position sender.

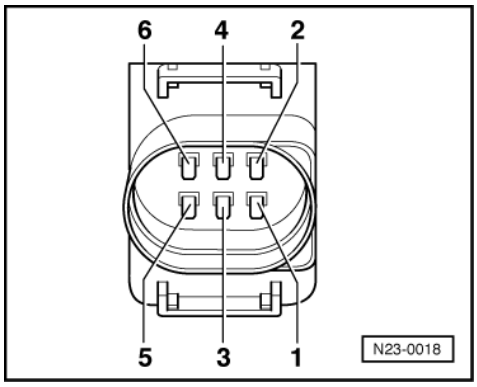

- -> Measure sender resistance between connector contacts 1+3.
  Specification:
  Accelerator pedal in idling speed position: 1.0...1.5 kω
  Accelerator pedal in full throttle position: 1.5...2.5 kω
- Measure resistance between connector contacts 4+6.
  Specification:
  Accelerator pedal in idling speed position: max.1.5 kω
  Accelerator pedal depressed: ∞ ω

If the specifications are not obtained:
- Replace accelerator pedal position sender (G79)
  =>Page 134 , item 2 .

If the specifications are obtained:
Engine code AGD (with 68 pin control unit)

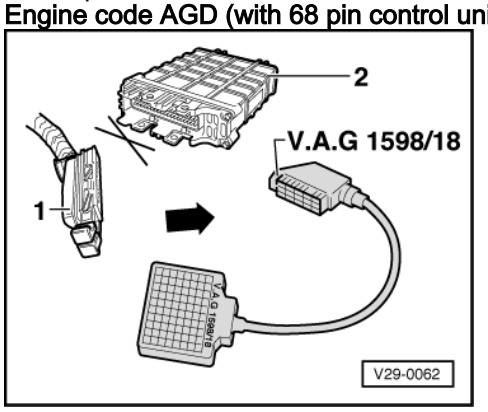

Protected by copyright. Copying for private or commercial purposes, in part or in whole, is not permitted unless authorised by Volkswagen AG. Volkswagen AG does not guarantee or accept any liability with respect to the correctness of information in this document. Copyright by Volkswagen AG.
satelettronica

- -> Connect test box V.A.G 1598/18 to control unit wiring harness -1-. The engine control unit -2- remains disconnected.

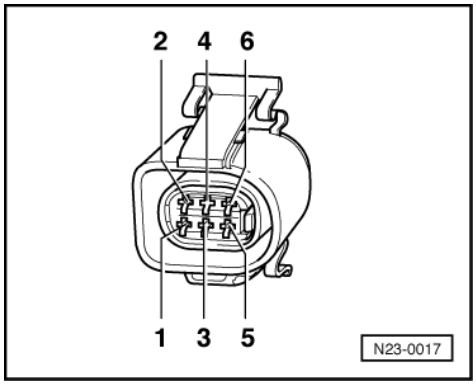

- -> Check wiring between test box and connector for open circuit according to current flow diagram.
  Contact 1+ socket 15
  Contact 2+ socket 57
  Contact 3+ socket 55
  Contact 4+ socket 65
  Contact 5+ socket 62
  Contact 6+ socket 33
  Wire resistance: max. 1.5 ω

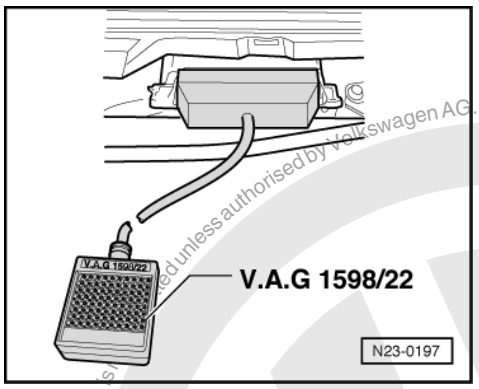

Engine codes AGD (with 80-pin control unit), AHG, AKU

- -> Connect test box V.A.G 1598/22 to control unit wiring harness.

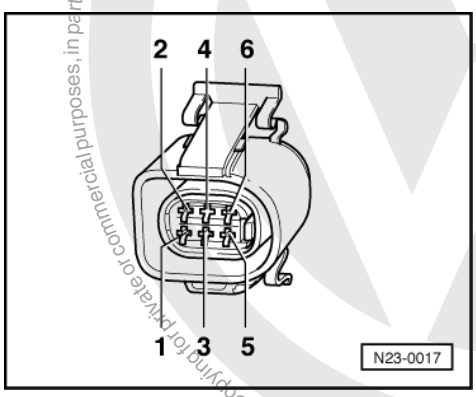

- -> Check wiring between test box and connector for open circuit according to current flow diagram.
  Contact 1+ socket 24
  Contact 2+ socket 11
  Contact 3+ socket 23
  Contact 4+ socket 12
  Contact 5+ socket 8
  Contact 6+ socket 25

Protected by copyright. Copying for private or commercial purposes, in part or whole, is not permitted unless authorised by Volkswagen AG. Volkswagen AG does not guarantee or accept any liability with respect to the correctness of information in this document. Copyright by Volkswagen AG.
satelettronica

Wire resistance: max. 1.5 ω

Continued for all engine codes

- Additionally check the wiring for short to battery positive or earth.
- Additionally check wires for short to one another.

If no fault is detected in the wiring:

- Renew engine control unit:

=> Repair group 23; Renewing, coding and adapting engine control unit; Renewing engine control unit Renewing, coding and adapting engine control unit Renewing engine control unit

4 - Accelerator mechanism: 10.99 > (Engine codes AGD, AKU, ASX)

4.1 - Accelerator mechanism: 10.99 > (Engine codes AGD, AKU, ASX)

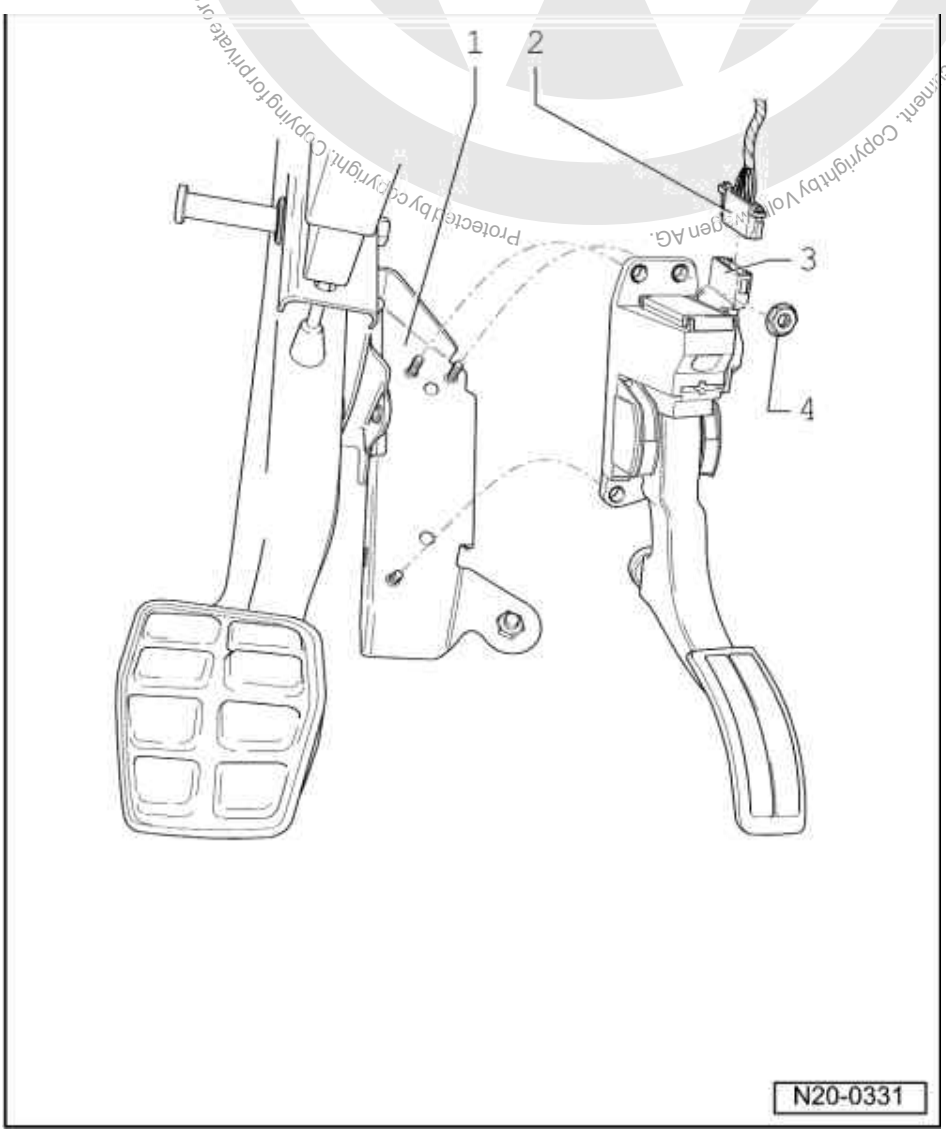

Volkswagen AG. Volkswagen AG does not guarantee or accept any liability with respect to the correctness of information in this document. Copyright by Volkswagen AG. Protected by copyright. Copying for private or commercial purposes, in part or in whole, is not permitted unless authorised by Volkswagen AG.
satelettronica

4.2 - Servicing accelerator mechanism

Vehicles with left-hand drive

Vehicles with right-hand drive

=> Page 146

1 **Connector**
- Black, 6-pin

2 **10 Nm**

3 **Accelerator pedal position sender (G79)**
- Not adjustable
- The accelerator pedal position passes the position of the pedal on to the engine control unit
- Remove footwell cover to remove sender
- Checking =>Page 144

4.3 - Checking accelerator pedal position sender

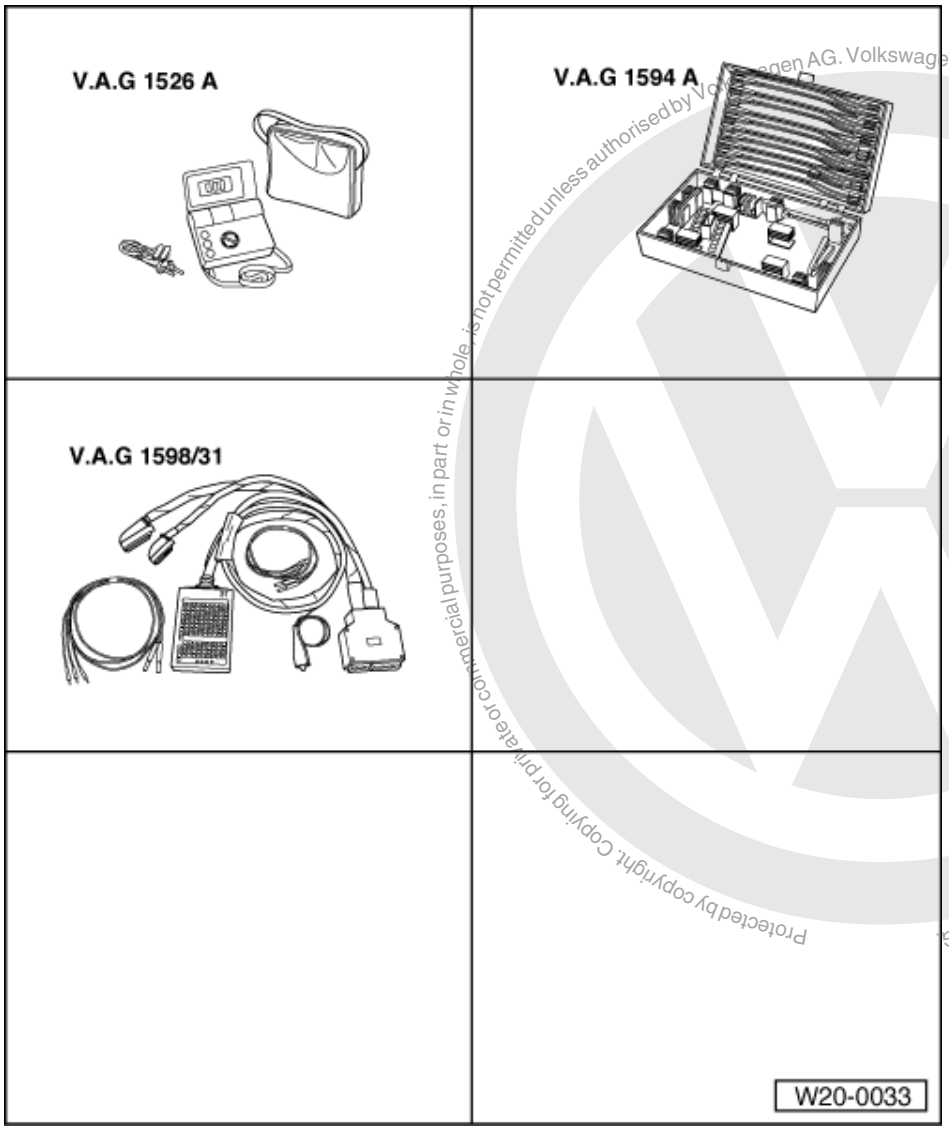

satelettronica
Protected by copyright. Copying for private or commercial purposes, in part or in whole, is not permitted unless authorised by Volkswagen AG. Volkswagen AG does not guarantee or accept any liability with respect to the correctness of information in this document. Copyright by Volkswagen AG.

Protected by copyright. Copying for private or commercial purposes, in part or in whole, is not permitted unless authorised by Volkswagen AG. Volkswagen AG does not guarantee or accept any liability with respect to the correctness of information in this document. Copyright by Volkswagen AG.

Special tools, workshop equipment, test and measuring appliances and auxiliary items required

- V.A.G 1526 A Hand multimeter or multimeter V.A.G 1715
- V.A.G 1594 A Adapter set
- V.A.G 1598/31 Test box
- Fault reader V.A.G 1551 or vehicle system tester V.A.G 1552 with cable V.A.G 1551/3
- Current flow diagram

Function

The accelerator pedal position sender is located on accelerator pedal and passes driver's requirement (pedal position) on further to the control unit.

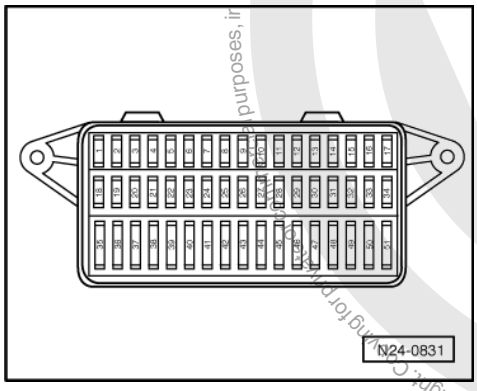

Check conditions

- Fuses must be OK.
- The battery voltage must be at least 11.5 V.

Test sequence

- Connect fault reader V.A.G 1551 (V.A.G 1552) and with ignition switched on select engine electronics control unit with the "Address word" 01:

=> Repair group 01; Self-diagnosis; Connecting fault reader V.A.G 1551 and selecting engine electronics control unit Self-diagnosis Connecting fault reader V.A.G 1551 and selecting engine electronics control unit

-> Indicated on display:

```
Rapid data transfer     HELP
Select function XXX
```

- Press keys 0 and 8 for the function "Read measured value block" and confirm entry with Q key.

-> Indicated on display:

```
Read measured value block
Input display group number XXX
```

- Press keys 0, 0 and 2 for "Display group number 2" and confirm entry with Q key.

```
Read measured value block 2
0 rpm     0.0 %     0     1     0     18.4 5C
```

-> Check accelerator pedal position display in display zone 2. The accelerator pedal must not be depressed.
Specification: 0.0 %

- Also check the idling speed switch display in display zone 3. The centre position must show 1.
Display: 0 1 0

```
Read measured value block 2
0 rpm     100.0 %     0     0     0
18.4 5C
```

-> Slowly depress accelerator pedal until fully down and observe display zones 2 and 3.

- Display zone 2:
The accelerator pedal position figure must increase continuously.

satelettronica

Specification at full throttle position: 100.0 %
- Display zone 3:
The centre position must change to 0.
Display: 0 0 0
- Press the ⇒key.
- Press keys 0 and 6 for the function "End output" and confirm entry with the Q key.
- Switch off ignition.

End specification value not achieved:

- Replace accelerator pedal position sender (G79)
=>Page 143 , item 3 .
- Interrogate fault memory:

=> Repair group 01; Self-diagnosis; Interrogating fault memory Self-diagnosis Interrogating fault memory

Display does not change or is erratic:

- Check accelerator pedal position sender wiring as follows:

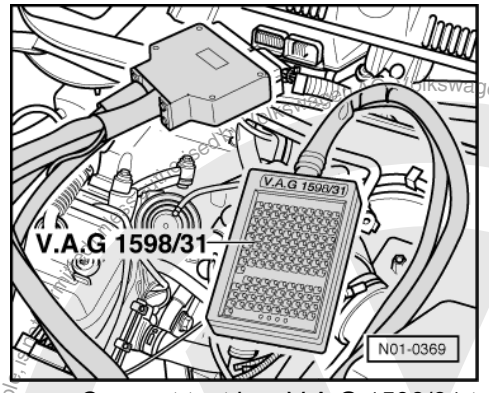

- -> Connect test box V.A.G 1598/31 to control unit wiring harness. The engine control unit remains disconnected.
- Remove cover in footwell (driver's side).
- Disconnect 6-pin connector for accelerator pedal position sender.

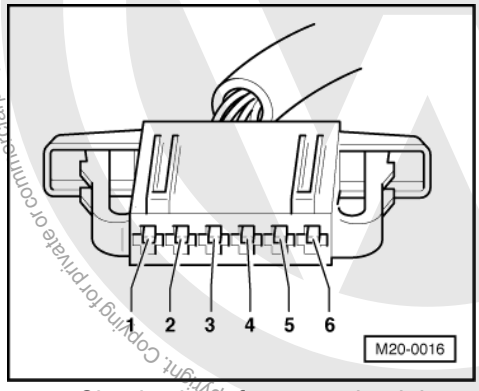

- -> Check wiring for open circuit between test box and connector using current flow diagram.
Contact 1+Socket 63
Contact 2+Socket 12
Contact 3+Socket 50
Contact 4+Socket 69
Contact 5+Socket 70
Contact 6+Socket 51
Wire resistance: max. 1.5 ω
- Additionally check the wiring for short to battery positive or earth.
- Additionally check wires for short to one another.

satelettronica

If no fault is detected in the wiring:
- Replace accelerator pedal position sender (G79)
  =>Page 143 , item 3 .
- Interrogate fault memory:

=> Repair group 01; Self-diagnosis; Interrogating fault memory Self-diagnosis Interrogating fault memory

4.4 - Accelerator mechanism: 10.99 > (RHD vehicles)

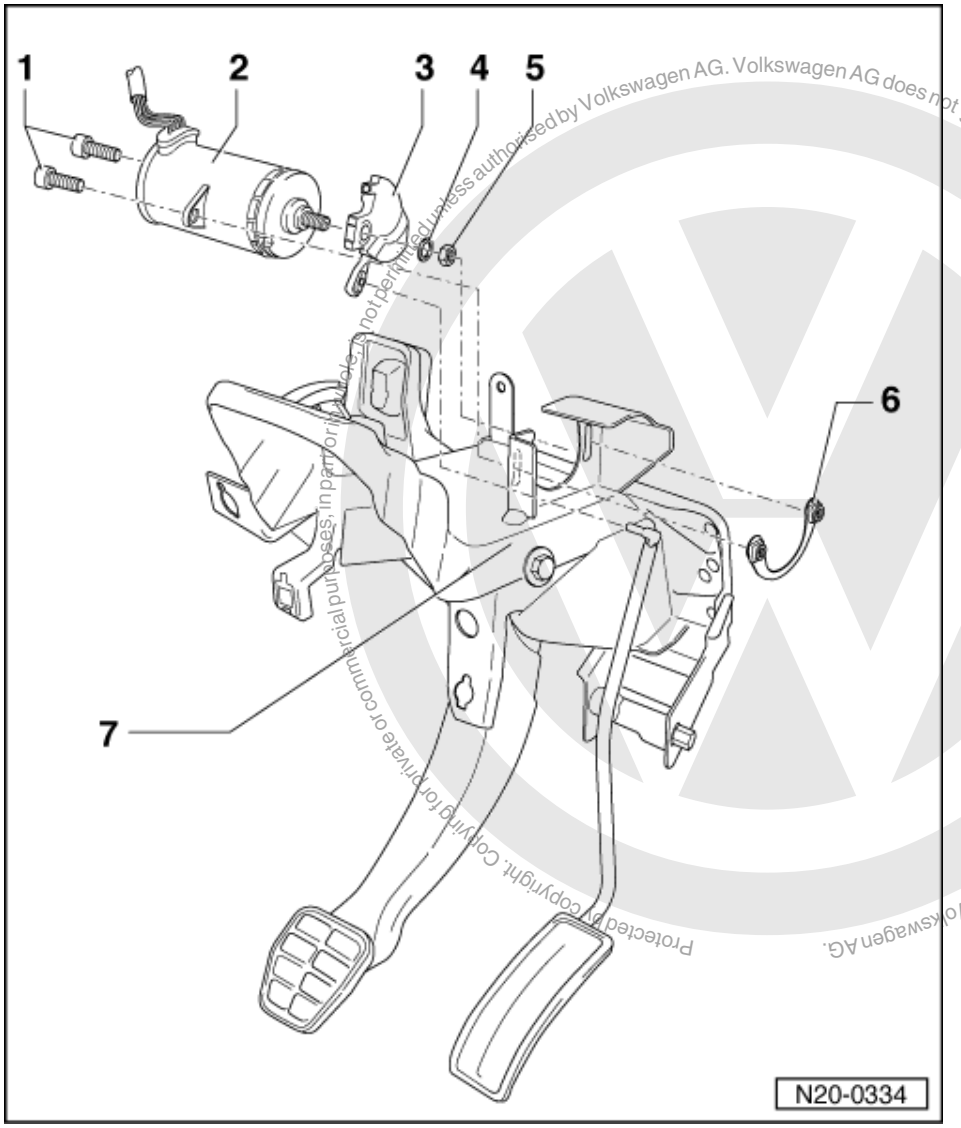

Protected by copyright. Copying for private or commercial purposes, in part or in whole, is not permitted unless authorised by Volkswagen AG. Volkswagen AG does not guarantee or accept any liability with respect to the correctness of information in this document. Copyright by Volkswagen AG.
satelettronica

4.5 - Servicing accelerator mechanism

1 10 Nm
2 Accelerator pedal position sender (G79)
- Checking =>Page 147
- Adjusting =>Page 150

3 Cable cam
4 Washer
5 10 Nm

6 Threaded retainer

7 Mounting
- Removing and installing

=> Brake systems; Repair group 46; Brake pedal - Assembly overview Brake pedal - Assembly overview

4.6 - Checking accelerator pedal position sender

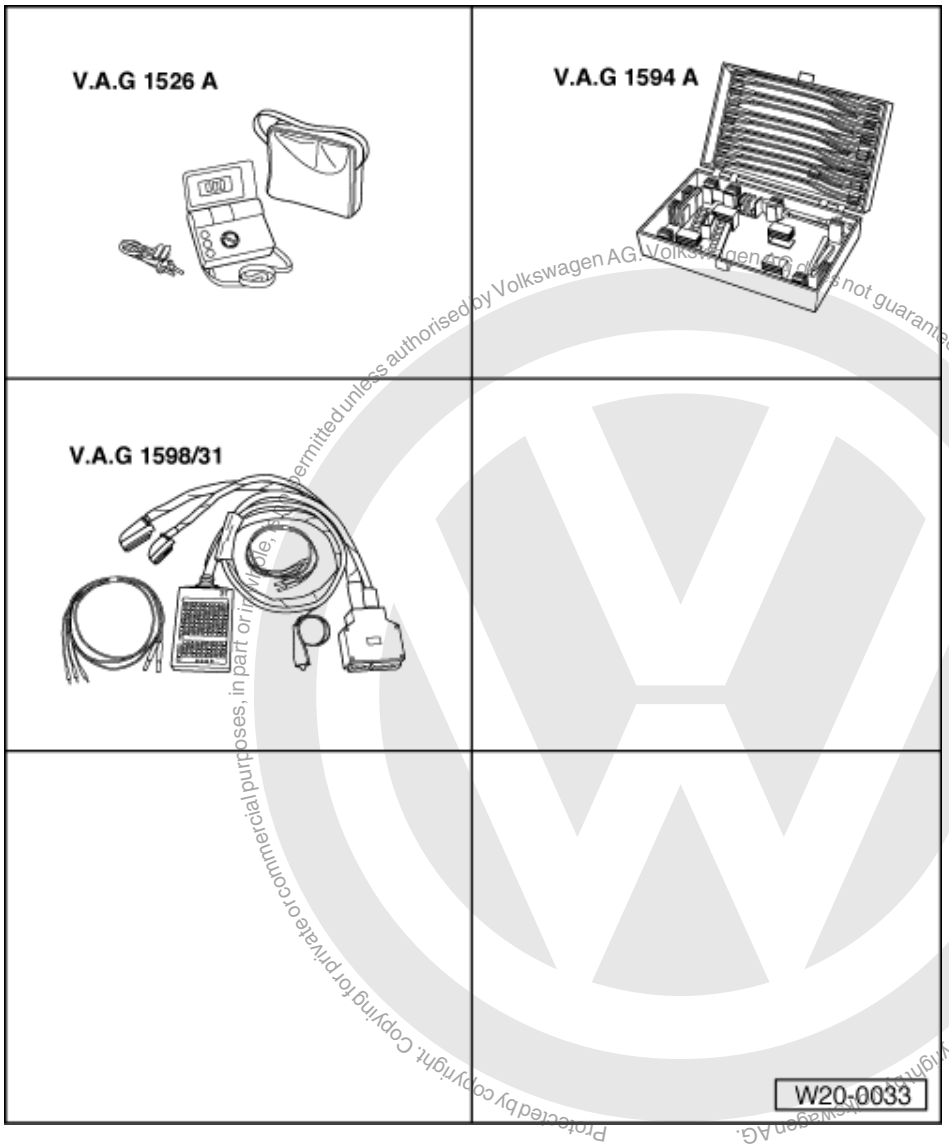

Protected by copyright. Copying for private or commercial purposes, in part or in whole, is not permitted unless authorised by Volkswagen AG. Volkswagen AG does not guarantee or accept any liability with respect to the correctness of information in this document. Copyright by Volkswagen AG.

satelettronica

Special tools, workshop equipment, test and measuring appliances and auxiliary items required

- V.A.G 1526 Hand multimeter
- V.A.G 1594 A Adapter set
- V.A.G 1598/31 Test box
- Fault reader V.A.G 1551 or vehicle system tester V.A.G 1552 with cable V.A.G 1551/3
- Current flow diagram

Test sequence

- Connect fault reader V.A.G 1551 (V.A.G 1552) and with ignition switched on select engine electronics control unit with the "Address word" 01:

=> Repair group 01; Self-diagnosis; Connecting fault reader V.A.G 1551 and selecting engine electronics control unit Self-diagnosis Connecting fault reader V.A.G 1551 and selecting engine electronics control unit

-> Indicated on display:

```
Rapid data transfer      HELP
Select function XXX
```

- Press keys 0 and 8 for the function "Read measured value block" and confirm entry with Q key.

-> Indicated on display:

```
Read measured value block      HELP
Input display group number XXX
```

- Press keys 0, 0 and 2 for "Display group number 2" and confirm entry with Q key.

```
Read measured value block 2
0 rpm      0.0 %      0 1 0      18.4 5C
```

-> Check accelerator pedal position display in display zone 2. The accelerator pedal must not be depressed.
Specification: 0.0 %

- Check additionally the idling speed switch display in display zone 3. The centre position must show 1.
  Display: 010

```
Read measured value block 2
0 rpm      100.0 %      0 0 0      18.4 5C
```

-> Depress accelerator pedal slowly until fully down, and observe display zones 2 and 3.

- Display zone 2:
  The accelerator pedal position figure must increase continuously.
  Specification at full throttle position: 100.0 %
- Display zone 3:
  The centre position must change to 0.
  Display: 000

End specification value not achieved:

- Press the ⇒key.
- Press keys 0 and 6 for the "End data transfer" function and confirm input with the Q key.
- Switch off ignition.
- Adjust accelerator pedal position sender
  =>Page 136

Display does not change or is erratic:

- Check accelerator pedal position sender as follows:
- Press the ⇒key.
- Press keys 0 and 6 for the "End data transfer" function and confirm input with the Q key.
- Switch off ignition.
- Remove cover in footwell (driver's side).
- Disconnect 6-pin connector for accelerator pedal position sender.

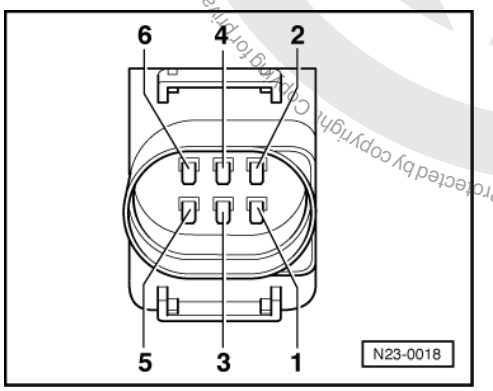

- -> Measure sender resistance between connector contacts 1+3.
  Specification:
  Accelerator pedal in idling position: 0.8...1.4 kω
- Measure sender resistance between connector contacts 2+3.
  Specification:

Protected by copyright. Copying for private or commercial purposes, in any form or by any means, is not permitted unless authorised by Volkswagen AG. Volkswagen AG does not guarantee or accept any liability with respect to the correctness of information in this document. Copyright by Volkswagen AG.
satelettronica

Accelerator pedal in idling position: 0.8...1.4 kω
- Check idling speed switch (F60) in accelerator pedal position sender. To do this measure resistance between connector contacts 4+6.
  Specification:
  Accelerator pedal in idling position: 0.8...1.2 kω
  Accelerator pedal depressed: ∞ ω
- Measure sender resistance between connector contacts 5+6.
  Specification:
  Accelerator pedal in idling position: ∞ ω
  Accelerator pedal depressed: 0.8...1.2 kω

If the specifications are not obtained:

- Replace accelerator pedal position sender (G79)
  =>Page 134 , item 2 .
- Interrogate fault memory:

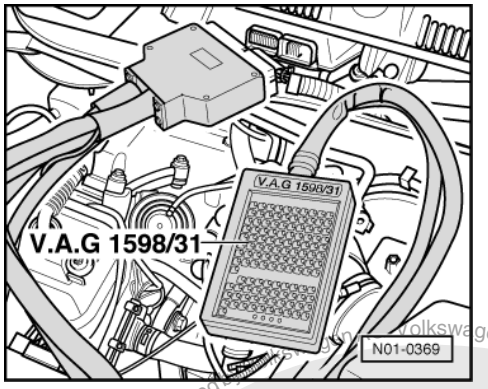

=> Repair group 01; Self-diagnosis; Interrogating and erasing fault memory Self-diagnosis Interrogating and erasing fault memory

If the specifications are obtained:

- -> Connect test box V.A.G 1598/31 to control unit wiring harness. The engine control unit remains disconnected.
  Remove cover in footwell (driver's side).
  Disconnect 6-pin connector for accelerator pedal position sender.

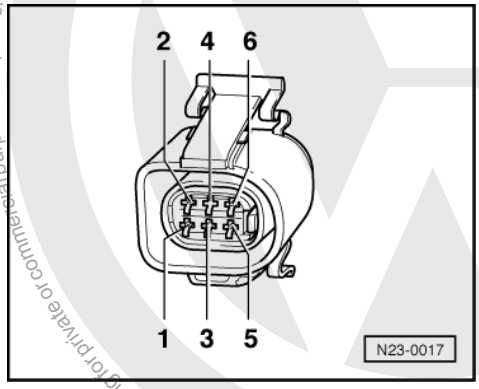

- -> Check wiring between test box and connector for open circuit according to current flow diagram.
  Contact 1+ socket 69
  Contact 2+ socket 12
  Contact 3+ socket 50
  Contact 4+ socket 70
  Contact 5+ socket 63
  Contact 6+ socket 51
  Wire resistance: max. 1.5 ω
- Additionally check wires for short to one another, to vehicle earth and to battery positive.

satelettronica

Specification: ∞ω

If no fault is detected in the wiring:

- Renew Diesel direct injection system control unit (J248)

=> Repair group 23; Renewing engine control unit, coding and matching; Renewing engine control unit Renewing engine control unit, coding and matching Renewing engine control unit

4.7 - Adjusting pedal position sender

Vehicles with right-hand drive only

Work sequence

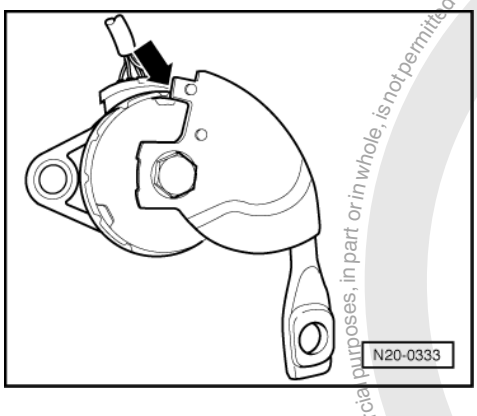

Adjusting cable cam:

- -> Install cable cam in position as illustrated.
- Then secure accelerator position sender with preassembled cable cam to mounting block.
- Reconnect sender 6 pin connector.

Fine adjustment with sender installed:

- Depress accelerator pedal by hand until accelerator pedal lies against accelerator pedal stop.
- If accelerator pedal stop is not reached,
  rotate sender in slotted holes of mounting bracket.
- After adjusting sender, check accelerator pedal position sender with fault reader V.A.G 1551 or vehicle system tester V.A.G 1552 => Page 138 , Checking accelerator pedal position sender.

Protected by copyright. Copying for private or commercial purposes, in part or in whole, is not permitted unless authorised by Volkswagen AG. Volkswagen AG does not guarantee or accept any liability with respect to the correctness of information in this document. Copyright by Volkswagen AG.
satelettronica

26 - Exhaust system

1 - Removing and installing parts of exhaust system

1.1 - Removing and installing parts of exhaust system

Notes:

- After working on the exhaust system ensure that the system is not under stress, and that it has sufficient clearance to the bodywork. If necessary, loosen double clamp(s) and align silencer and exhaust pipe so that sufficient clearance is maintained to the bodywork and the support rings are evenly loaded.
- Renew self-locking nuts.

1.2 - Exhaust manifold, front exhaust pipe and catalyst with attachments

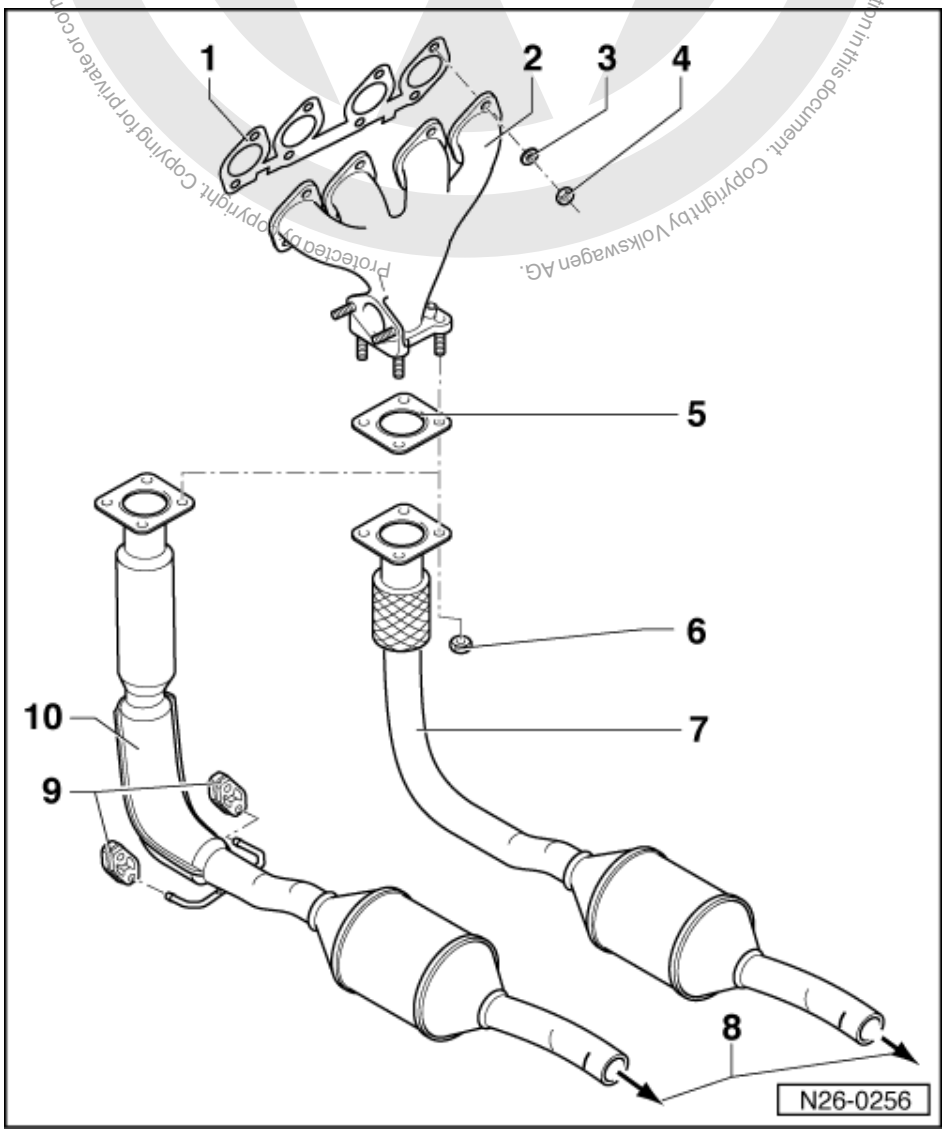

1 Gasket
- Renew

satelettronica

2 Exhaust manifold
3 Washer
4 25 Nm
5 Gasket
- Renew

6 40 Nm
7 Front exhaust pipe with catalyst
- Engine code AEF
  ‣06.96

8 To front silencer

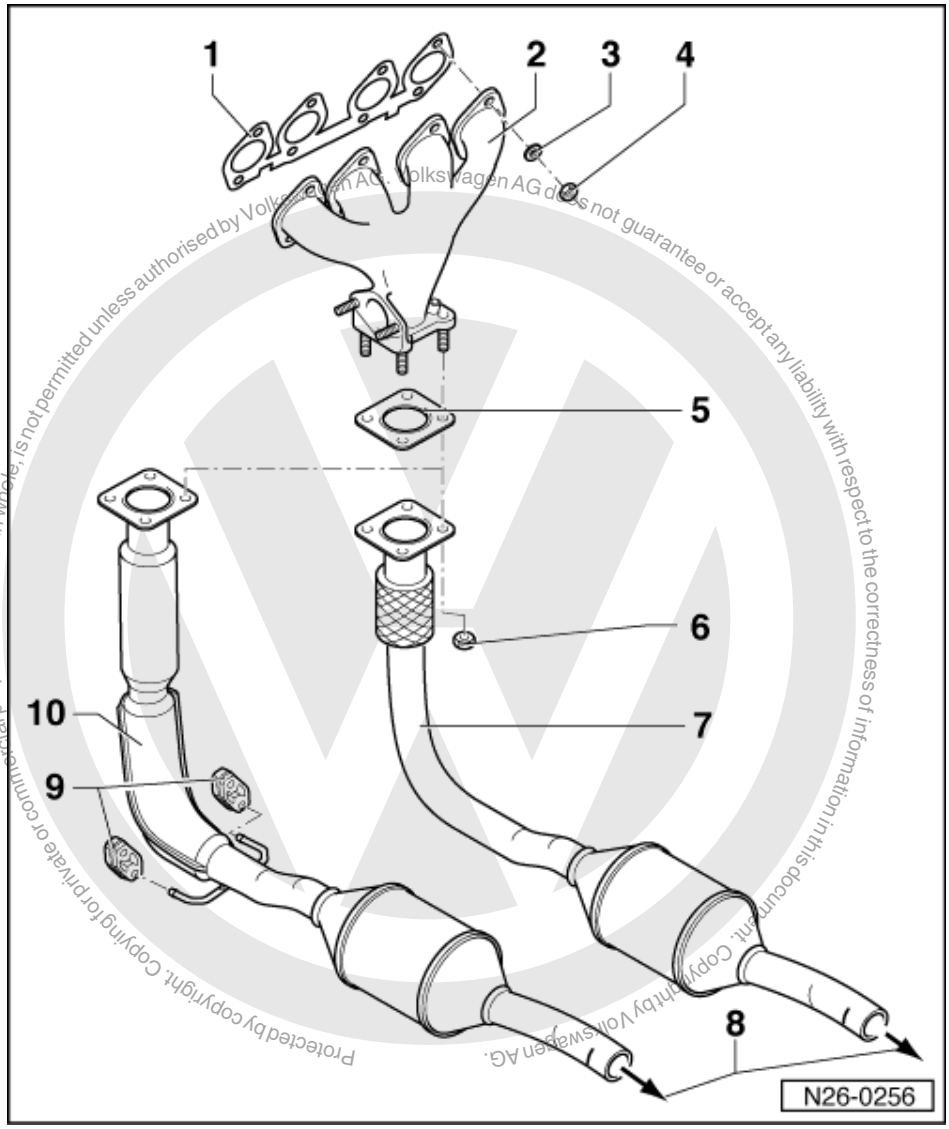

9 Mounting
- Renew if damaged
- Engine codes AEF 07.96 ‣, AGD, AHG, AKU, ASX

10 Front exhaust pipe with catalyst
- Engine codes AEF 07.96 ‣, AGD, AHG, AKU, ASX

satelettronica

1.3 - Silencer with mountings

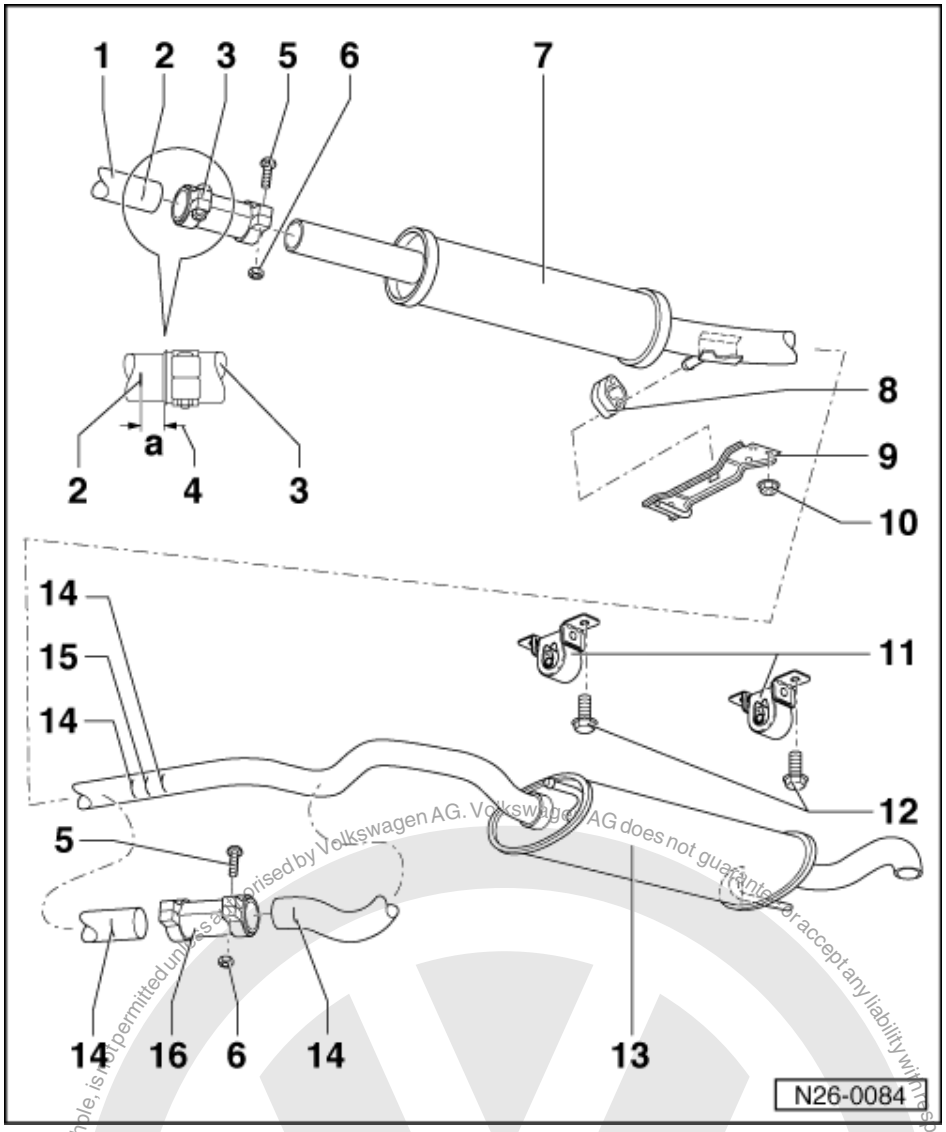

1 Front exhaust pipe with catalyst
2 Marking
- Three times on circumference

3 Double clamp
4 Dimension-a- = ca. 5 mm
5 Carriage bolt
6 25 Nm
7 Front silencer1)
8 Mounting
- Renew if damaged

9 Connecting piece

Protected by copyright. Copying for private or commercial purposes, in part or in whole, is not permitted unless authorised by Volkswagen AG. Volkswagen AG does not guarantee or accept any liability with respect to the correctness of information in this document. Copyright by Volkswagen AG.
satelettronica

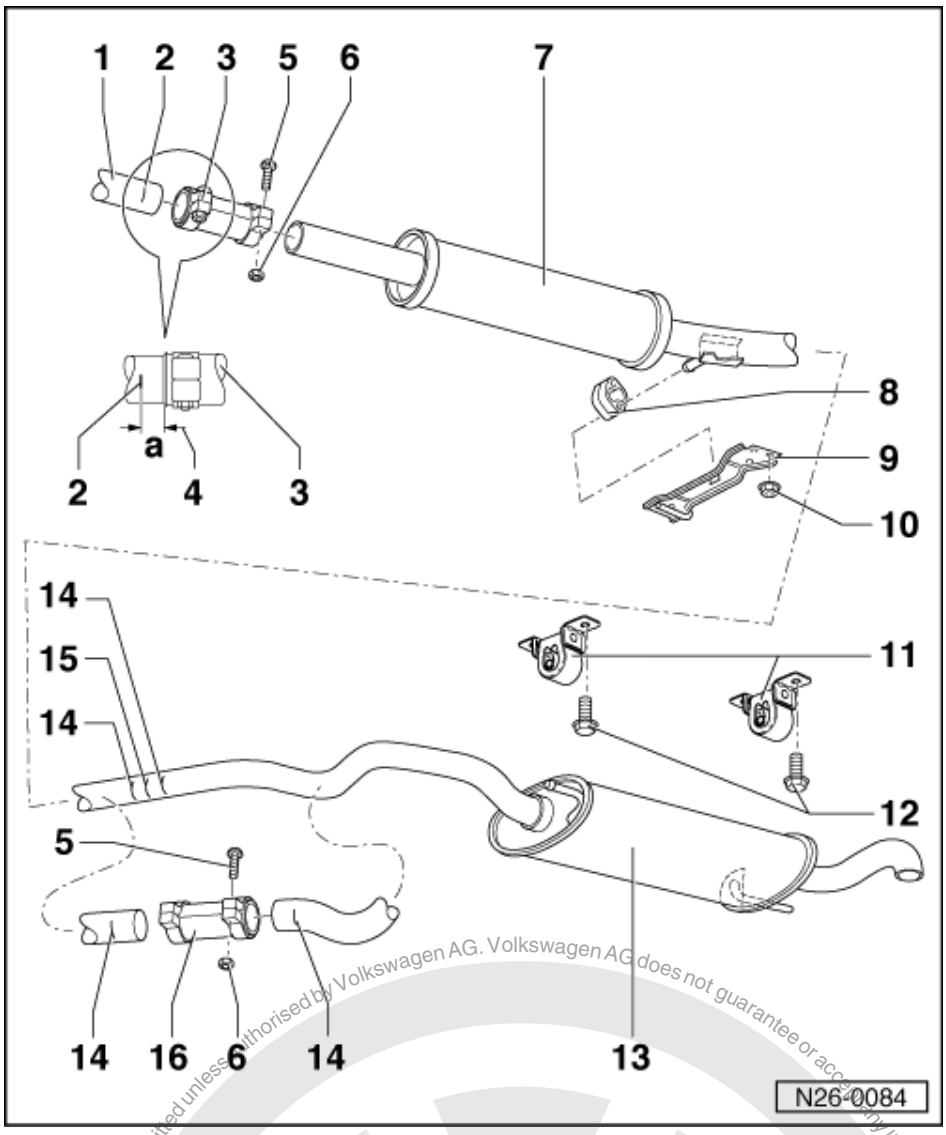

10 15 Nm
11 Mounting
12 20 Nm + 1/4 turn (90 °) further
- Renew
- The quarter turn further can be done in several stages.

13 Rear silencer1)
- Engine codes AGD, AHG, AKU with twin end pipes

14 Marking
- Three times on circumference
- For repair double clamp, item - 16 -

Protected by copyright. Copying for private or commercial purposes, in part or in whole, is not permitted unless authorised by Volkswagen AG. Volkswagen AG does not guarantee or accept any liability with respect to the correctness of information in this document. Copyright by Volkswagen AG.
satelettronica

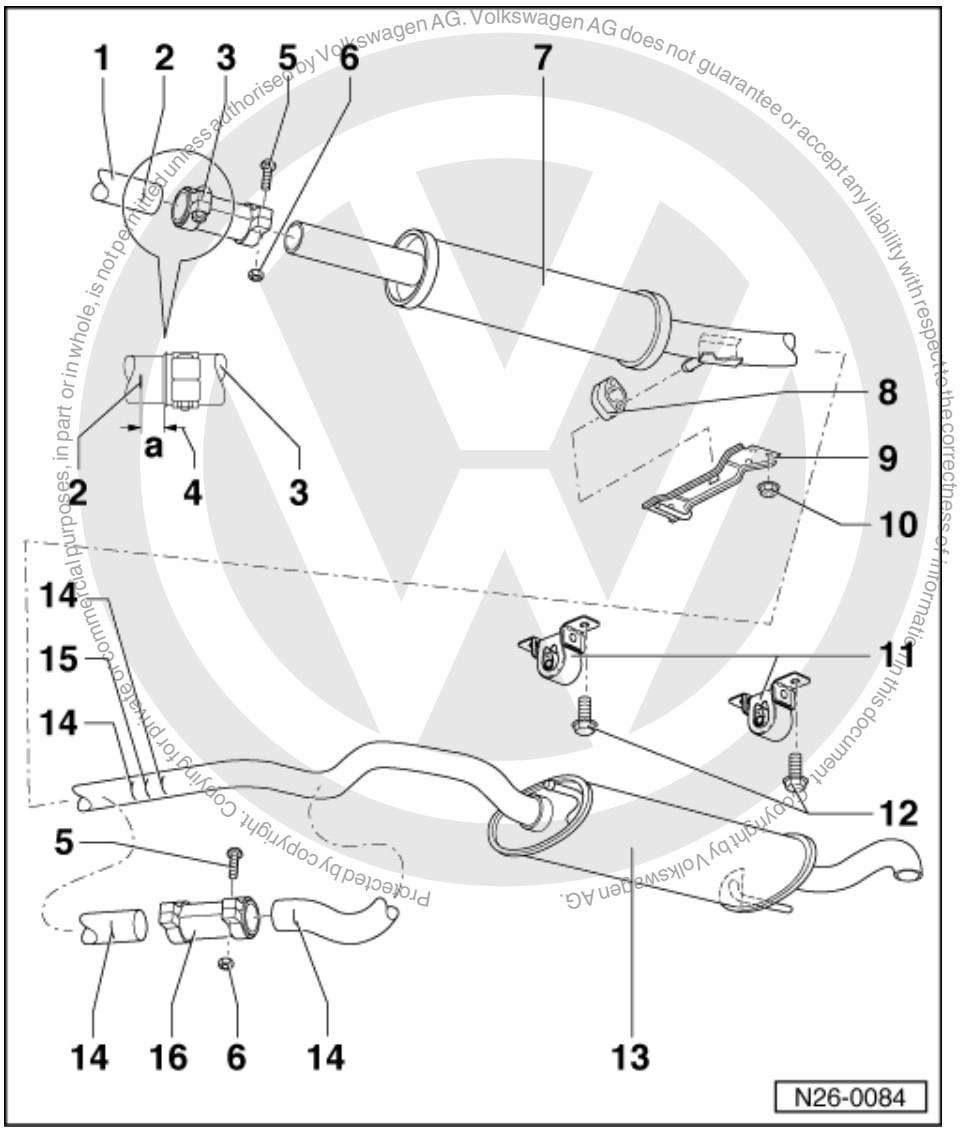

15 Separating point

- For repair cases
- Position embossed on exhaust pipe
- As standard, front exhaust pipe and rear silencers are installed as a single component. In repair cases the front exhaust pipe and rear silencer are supplied individually with a double clamp for connecting together.
- Cut through connecting pipe with body saw e.g. V.A.G 1523 at right angles at the separating point

16 Repair double clamp

- Must be slid on to the markings, item - 14 -

2 - Exhaust gas recirculation system: Engine code AEF

2.1 - Exhaust gas recirculation system: Engine code AEF

Notes:

- The control of the exhaust gas recirculation system is undertaken by the automatic glow period control unit (J179) via EGR valve (N18) to (mechanical) exhaust gas recirculation valve.
- Checking actuation of EGR valve (N18):

satelettronica

=> Repair group 01; Self-diagnosis; Final control diagnosis Self-diagnosis Final control diagnosis

- The exhaust gas recirculation is switched off above approx. 1000 m by the altitude correction switch in the automatic glow period control unit.
- The engine speed cut-out is via the automatic glow period control unit (J179). The exhaust gas recirculation is switched on at engine speeds above 825 rpm and is switched off at engine speeds above 3200 rpm.
- During acceleration the exhaust gas recirculation is switched off for 2 seconds.
- Renew self-locking nuts.

2.2 - Removing and installing parts of exhaust gas recirculation system

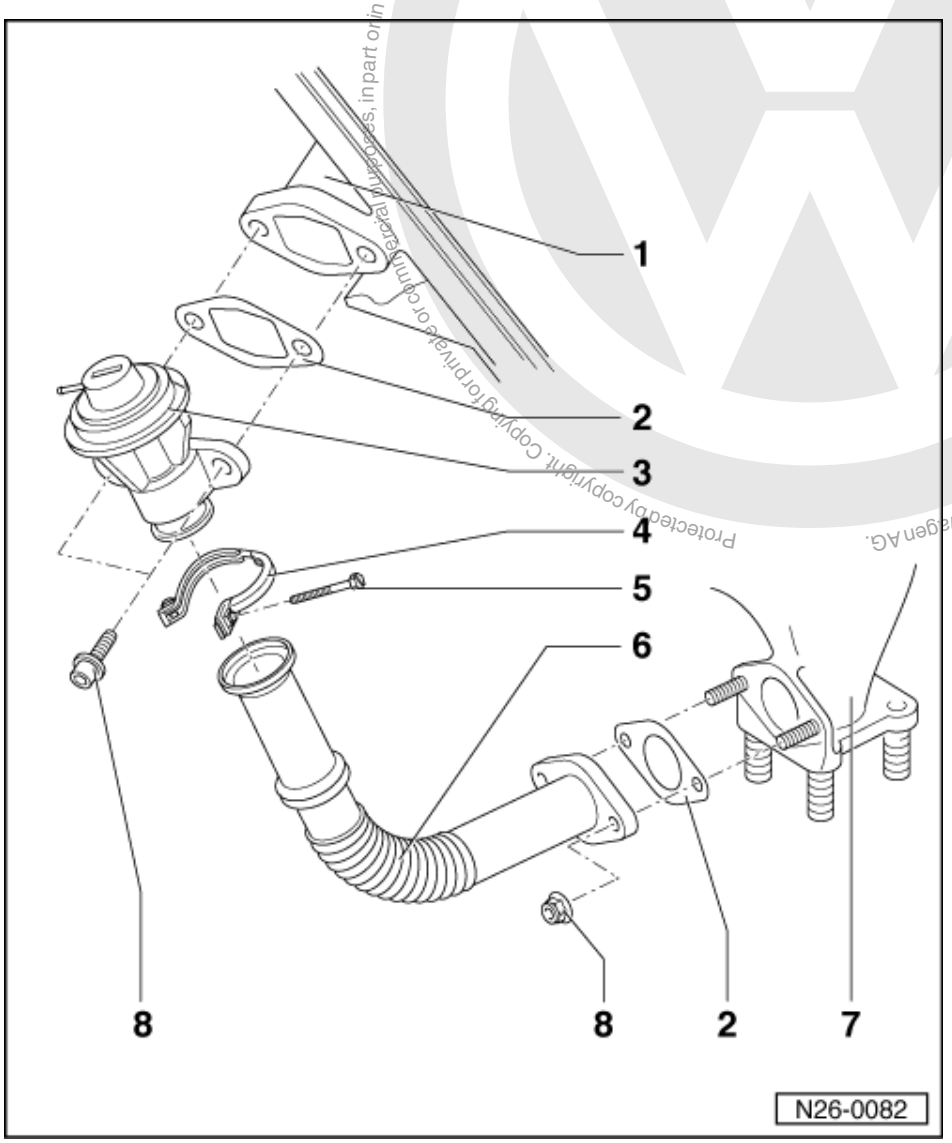

1 Intake manifold
2 Gasket
- Renew

3 Exhaust gas recirculation valve (mechanical)
- Checking => Page 159
- Checking activation:

=> Repair Group 01; Self-diagnosis; Final control diagnosis Self-diagnosis Final control diagnosis

4 Clamp
5 10 Nm

satelettronica

6 Connecting pipe
7 Exhaust manifold
8 25 Nm

2.3 - Checking exhaust gas recirculation

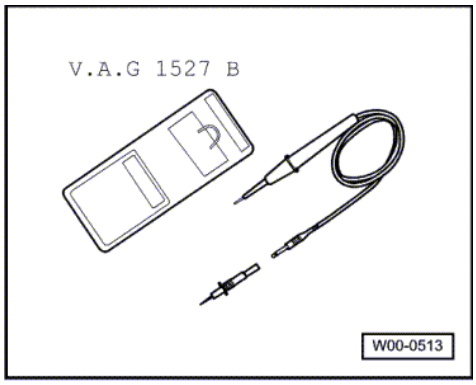

Special tools, workshop equipment, testers, measuring instruments and auxiliary items required

- V.A.G 1527 B Diode test lamp

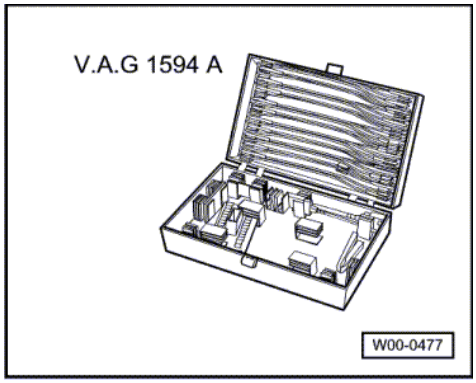

- V.A.G 1594 A Adapter set
- Current flow diagram

Check conditions

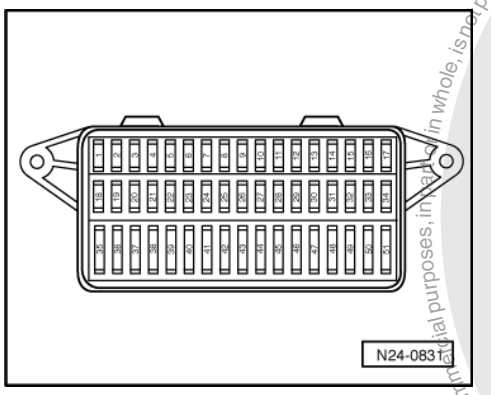

- Fuses must be OK.
- The battery voltage must be at least 11.5 V.

satelettronica
Copyright by Volkswagen AG. Volkswagen AG does not guarantee or accept any liability with respect to the correctness of information in this document. Copyright by Volkswagen AG. Copying for private or commercial purposes, in part or in whole, is not permitted unless authorised by Volkswagen AG.

Functional check

- Start engine and run at idling speed.

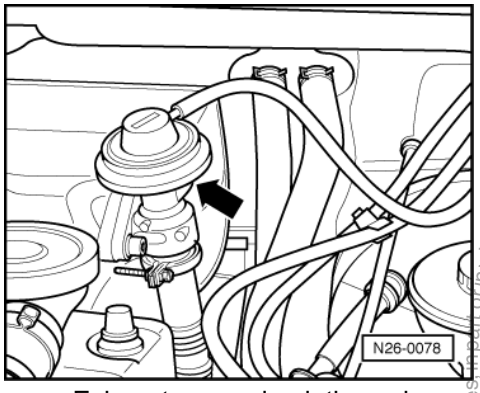

- -> Exhaust gas recirculation valve membrane rod is pulled towards vacuum hose connector (observe membrane rod through opening -arrow-). Exhaust gas is supplied.
- Increase engine speed to above 3200 rpm. The exhaust gas recirculation is switched off when 3200 rpm is exceeded (membrane moves towards exhaust gas manifold).
- Switch off ignition.

If exhaust gas recirculation does not work as described:

Check actuation of EGR valve (N18) as follows:

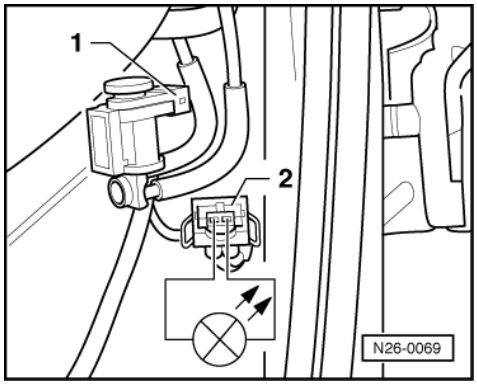

- -> Pull 2 pin connector -2- off EGR valve (N18) -1-.
- Connect diode test lamp V.A.G 1527 using aux. cables from V.A.G 1594 to connector contacts.
- Start engine and run at idling speed.
  LED must light up
- Increase speed to over 3200 rpm.
  LED must go out

LED does not light up or go out as described:

- Check wiring according to current flow diagram. Renew automatic glow period control unit (J179) as necessary.

=> Current flow diagrams, Electrical fault finding and Fitting locations

LED lights up and goes out as described:

- Check mechanical exhaust gas recirculation valve
  => Page 159
- Check EGR valve (N18)
  => Page 159 .

Protected by copyright. Copying for private or commercial purposes, in part or in whole, is not permitted unless authorised by Volkswagen AG. Volkswagen AG does not guarantee or accept any liability with respect to the correctness of information in this document. Copyright by Volkswagen AG.
satelettronica

2.4 - Checking exhaust gas recirculation valve (mechanical)

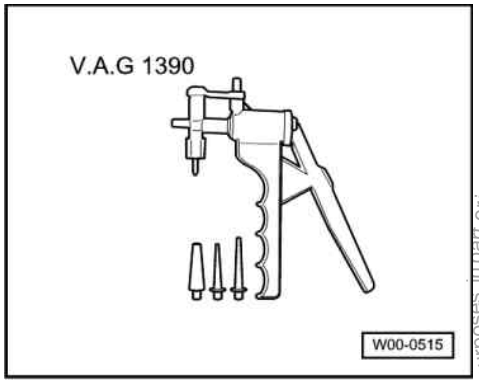

Special tools, workshop equipment, testers, measuring instruments and auxiliary items required

- V.A.G 1390 Hand vacuum pump

Test sequence

- Pull vacuum hose off (mechanical) exhaust gas recirculation valve.

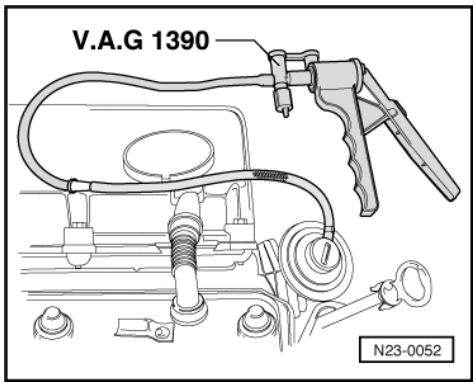

- -> Connect hand vacuum pump V.A.G 1390 to valve.
- Operate pump.
  Membrane must move in direction of vacuum connection
  (establish by feeling from below).
- Pull hand vacuum pump hose off (mechanical) exhaust gas recirculation valve.
  The valve must clearly be heard to close (membrane moves in direction of exhaust manifold).

2.5 - Checking EGR valve (electrical)

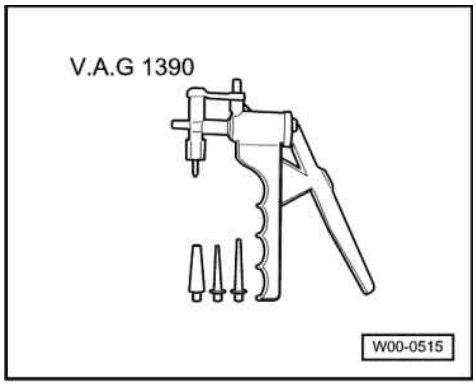

Protected by copyright. Copying for private or commercial purposes, in part or in whole, is not permitted unless authorised by Volkswagen AG. Volkswagen AG does not give any guarantee or accept any liability with respect to the correctness of information in this document. Copyright by Volkswagen AG.
satelettronica

Special tools, workshop equipment, testers, measuring instruments and auxiliary items required

- V.A.G 1390 Hand vacuum pump

Test sequence

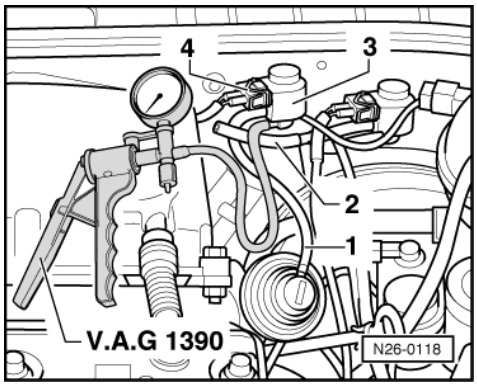

- -> Pull vacuum hose -2- off ERG valve (N18) -3- and connect hand vacuum pump V.A.G 1390.
- Pull vacuum hose -1- off (mechanical) exhaust gas recirculation valve.
- Pull 2 pin connector -4- off EGR valve (N18) -3-.
- Start engine and run at idling speed.
- Operate hand vacuum pump.
  A vacuum must build up.
- Fit 2 pin connector -4- on EGR valve (N18) -3-. Vacuum at hand vacuum pump must release instantly.

3 - Exhaust gas recirculation system: Engine codes AGD, AHG, AKU, ASX

3.1 - Exhaust gas recirculation system: Engine codes AGD, AHG, AKU, ASX

Notes:

- The control of the exhaust gas recirculation system is undertaken by diesel direct injection system control unit (J248) via EGR valve (N18) (electric) to exhaust gas recirculation valve (mechanical).
- Checking actuation of EGR valve (N18):

=> Repair group 01; Final control diagnosis; Performing final control diagnosis Final control diagnosis Performing final control diagnosis

- The cone-shaped plunger in the mechanical exhaust gas recirculation valve ensures that various cross sectional openings are possible at different plunger lifts.
- Pulsed control makes every conceivable valve position possible.
- Renew self-locking nuts.

Protected by copyright. Copying for private or commercial purposes, in part or in whole, is not permitted unless authorised by Volkswagen AG. Volkswagen AG does not guarantee or accept any liability with respect to the correctness of information in this document. Copyright by Volkswagen AG.
satelettronica

3.2 - Removing and installing parts of exhaust gas recirculation system

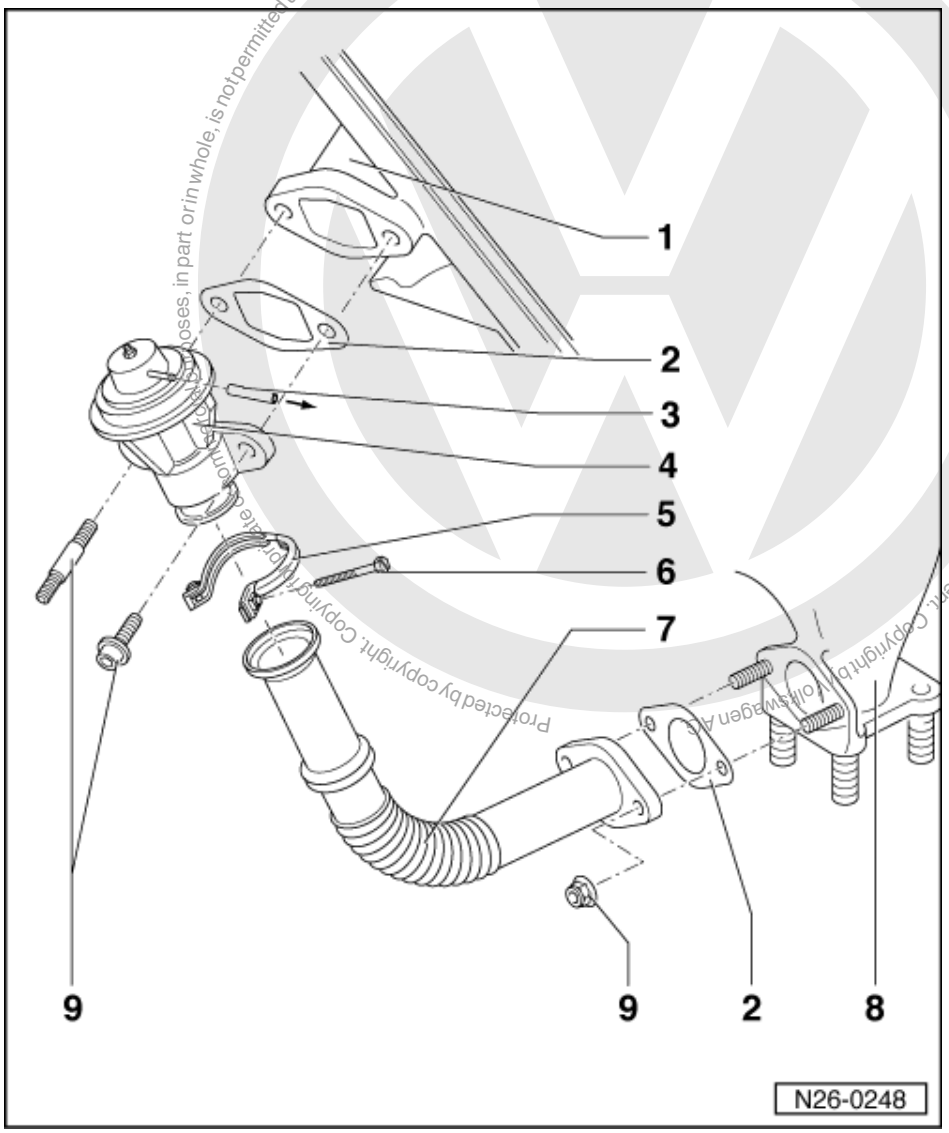

1 Intake manifold
2 Gasket
- Renew

3 Vacuum hose
- To EGR valve (N18)
- Connection diagram for vacuum hoses => Page 163

4 Exhaust gas recirculation valve (mechanical)
- Checking => Page 164
- Checking activation:

=> Repair group 01; Final control diagnosis; Performing final control diagnosis Final control diagnosis Performing final control diagnosis

5 Clamp
6 10 Nm
7 Connecting pipe

satelettronica

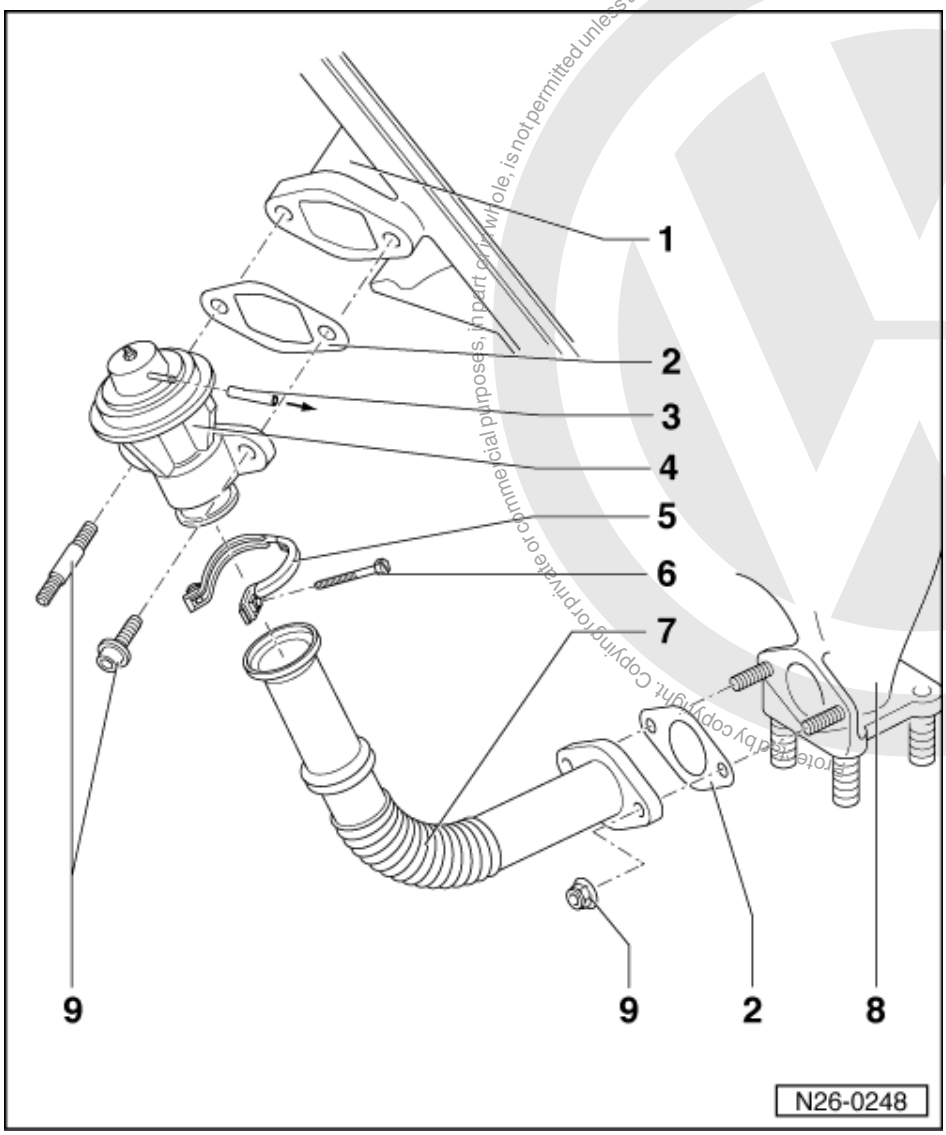

8 Exhaust manifold
9 25 Nm

Protected by copyright. Copying for private or commercial purposes, in part or in whole, is not permitted unless authorised by Volkswagen AG. Volkswagen AG does not guarantee or accept any liability with respect to the correctness of information in this document. Copyright by Volkswagen AG.
satelettronica

3.3 - Connection diagram for vacuum hoses

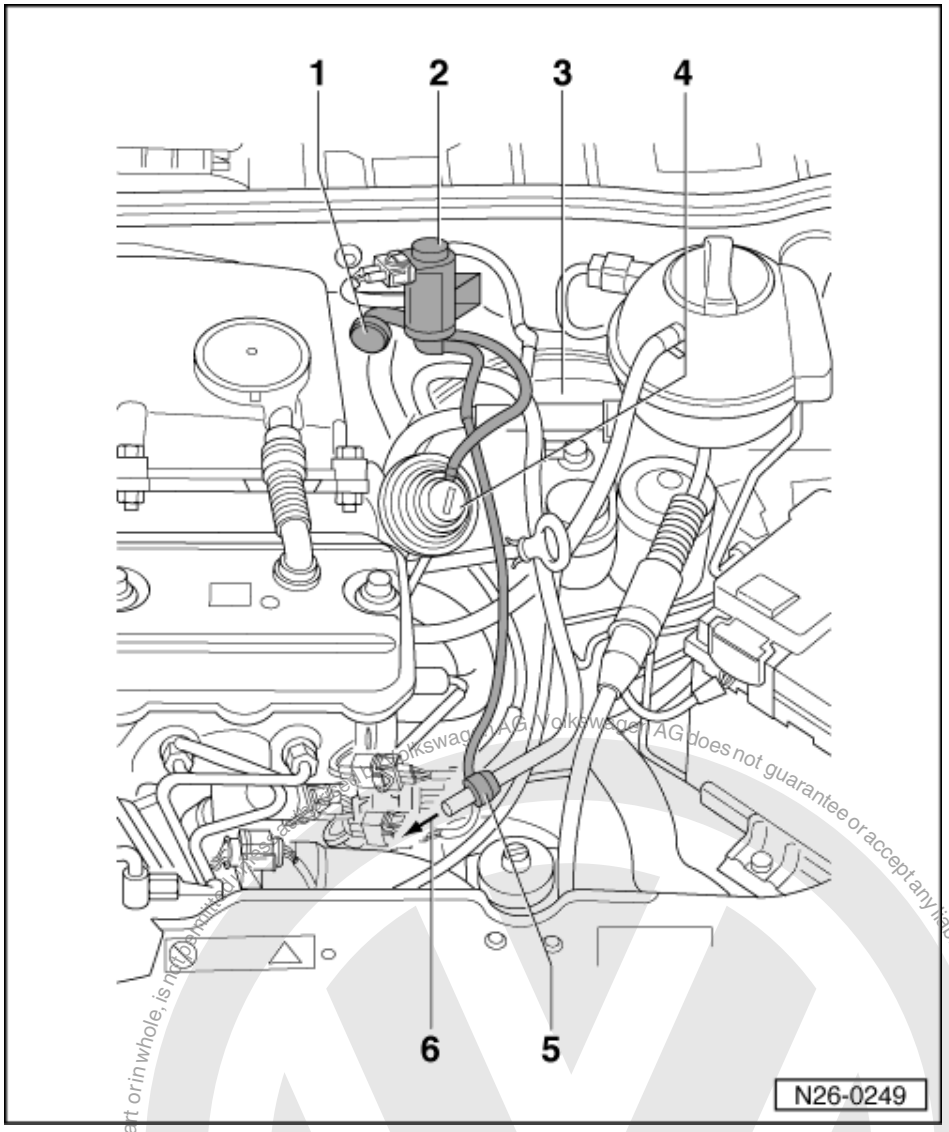

1 Vacuum hose
- With air cleaner

2 Exhaust gas recirculation valve (N18)
- Checking => Page 165
- Checking activation:

=> Repair group 01; Final control diagnosis; Performing final control diagnosis Final control diagnosis Performing final control diagnosis

3 Brake servo
4 Exhaust gas recirculation valve (mechanical)
5 Non-return valve
- Note installation position

6 To vacuum pump

Protected by copyright. Copying for private or commercial purposes, in part or in whole, is not permitted unless authorised by Volkswagen AG. Volkswagen AG does not guarantee or accept any liability with respect to the correctness of information in this document. Copyright by Volkswagen AG.
satelettronica

3.4 - Checking exhaust gas recirculation valve (mechanical)

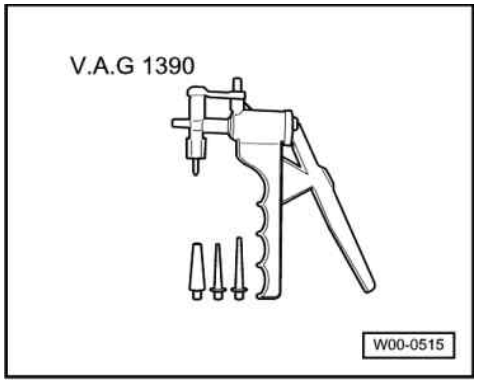

Special tools, workshop equipment, testers, measuring instruments and auxiliary items required

- V.A.G 1390 Hand vacuum pump

Test sequence

- Pull vacuum hose off (mechanical) exhaust gas recirculation valve.

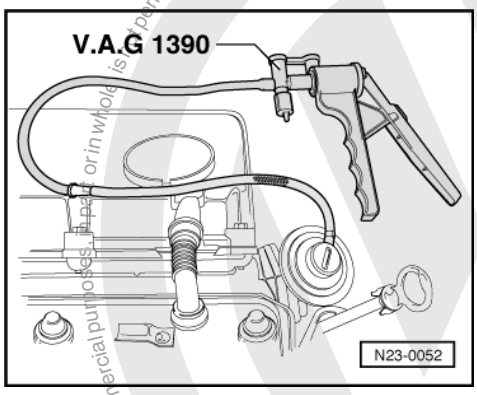

- -> Connect hand vacuum pump V.A.G 1390 to valve.
- Operate pump.
  Membrane must move in direction of vacuum connection
  (establish by feeling from below).
- Pull hand vacuum pump hose off (mechanical) exhaust gas recirculation valve.
  The valve must clearly be heard to close (membrane moves in direction of exhaust manifold).

satelettronica

3.5 - Checking EGR valve

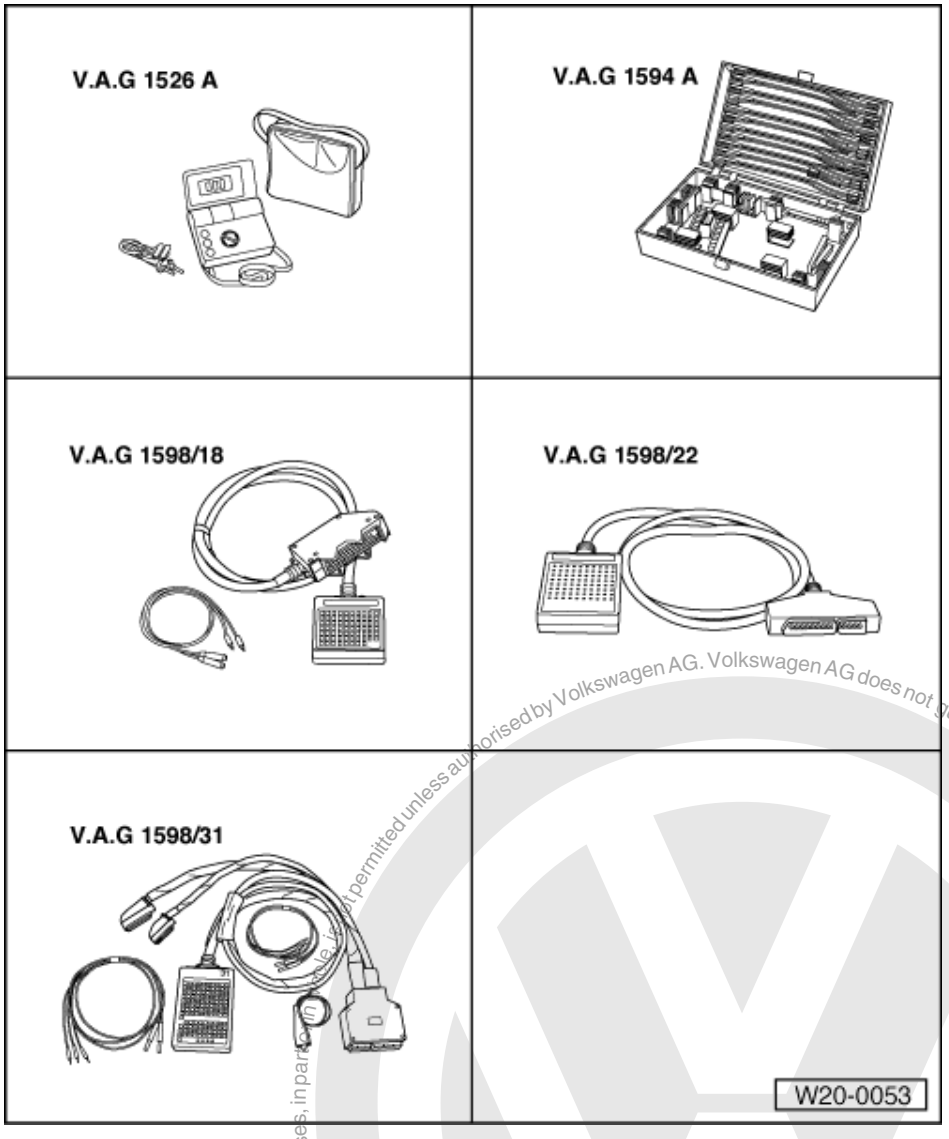

Special tools, workshop equipment, test and measuring appliances and auxiliary items required

- V.A.G 1526 A Hand multimeter or multimeter V.A.G 1715
- V.A.G 1594 A Adapter set
- V.A.G 1598/18 Test box for 68-pin control unit
- V.A.G 1598/22 Test box for 80-pin control unit
- V.A.G 1598/31 Test box for 121-pin control unit
- Fault reader V.A.G 1551 or vehicle system tester V.A.G 1552 with cable V.A.G 1551/3
- Current flow diagram

Protected by copyright. Copying for private or commercial purposes, in part or in whole, is not permitted unless authorised by Volkswagen AG. Volkswagen AG does not guarantee or accept any liability with respect to the correctness of information in this document. Copyright by Volkswagen AG.
satelettronica

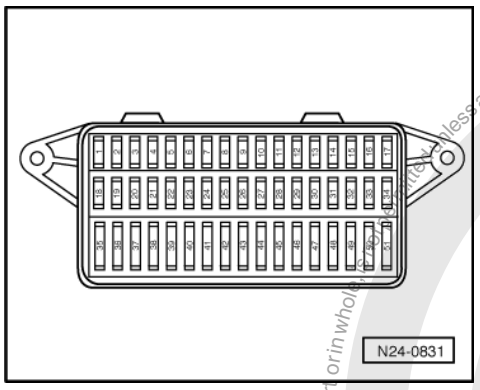

Check conditions

- Fuses must be OK.
- The battery voltage must be at least 11.5 V.

Test sequence

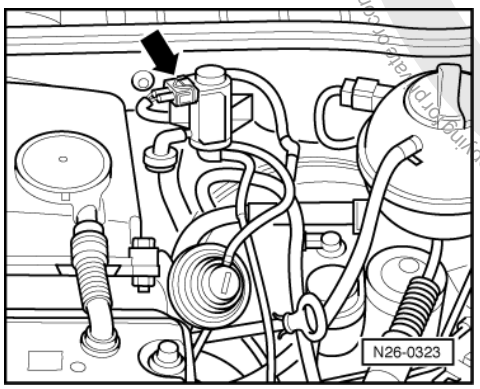

- -> Pull 2-pin connector off EGR valve (N18) -arrow-.

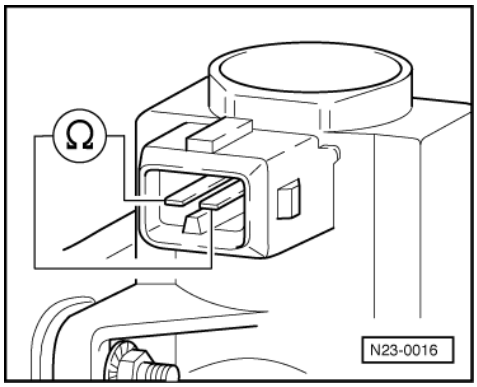

- -> Measure resistance between valve contacts.
  Specification:
  Engine codes AGD, AHG:
  52.5...62.5 ω
  Engine codes AKU, ASX:
  14.0...20.0 ω

Note:

At room temperature the resistance is in the area of the lower tolerance and when engine is at operating temperature in region of upper tolerance.

Protected by copyright. Copying for private or commercial purposes, in part or in whole, is not permitted unless authorised by Volkswagen AG. Volkswagen AG does not guarantee or accept any liability with respect to the correctness of information in this document. Copyright by Volkswagen AG.
satelettronica

If the specification is not obtained:

- Replace EGR valve (N18).

Checking voltage supply for EGR valve (N18)

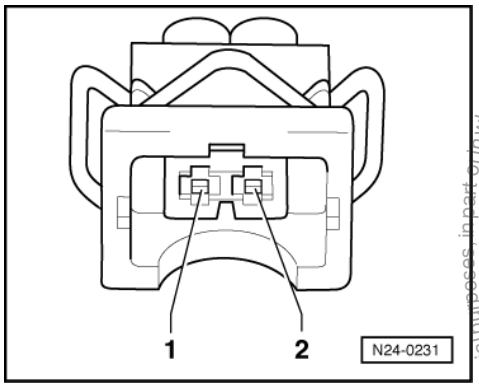

- -> Connect hand multimeter V.A.G 1526 with aux. cables from V.A.G 1594 to connector contact 1 and engine earth.
- Switch on ignition.
  Specification: min. 11.5 V
- Switch off ignition.

If the specification is not obtained:

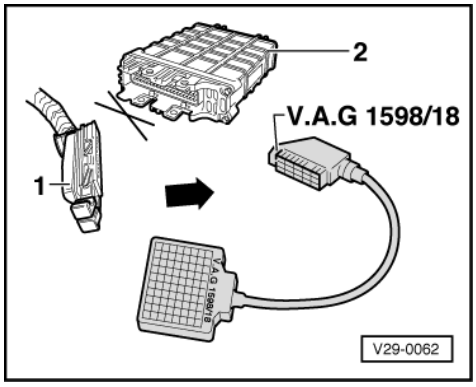

Engine code AGD (with 68 pin control unit)

- -> Connect test box V.A.G 1598/18 to control unit wiring harness. The engine control unit -2- is not connected.

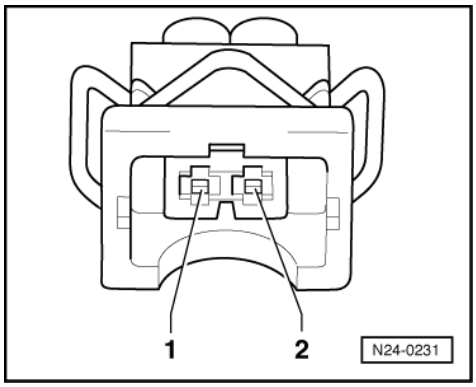

- Check wiring for open circuit between test box and connector using current flow diagram.
  Contact 1+ socket 68
  Contact 2+ socket 25

Protected by copyright. Copying for private or commercial purposes, in part or in whole, is not permitted unless authorised by Volkswagen AG. Volkswagen AG does not guarantee or accept any liability with respect to the correctness of information in this document. Copyright by Volkswagen AG.
satelettronica

Wire resistance: max. 1.5 ω

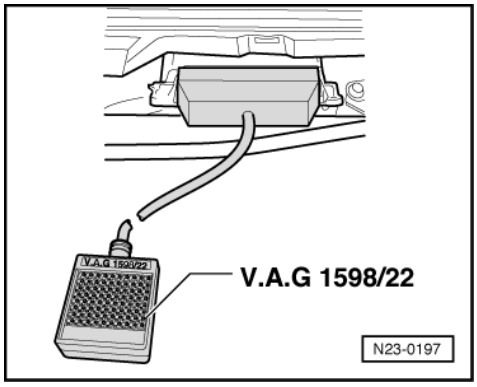

Engine codes AGD, AHG, AKU:

with 80-pin control unit

- -> Connect test box V.A.G 1598/22 to control unit wiring harness.

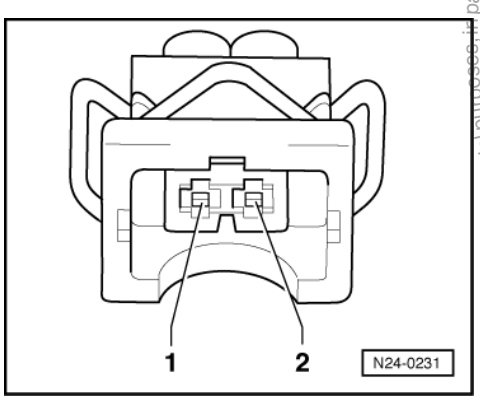

- Check wiring between test box and connector for open circuit according to current flow diagram.
  Contact 1+ socket 2
  Contact 1+ socket 28
  Contact 2+ socket 29
  Wire resistance: max. 1.5 ω

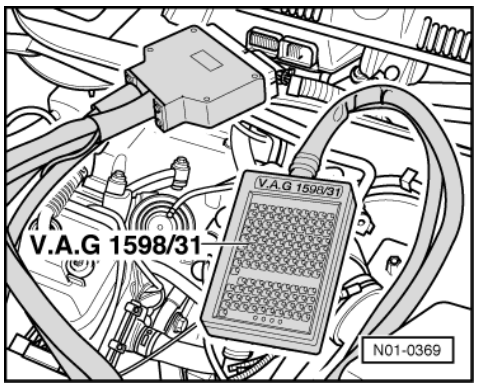

Engine codes AGD, AKU, ASX:

with 121-pin control unit

- -> Connect test box V.A.G 1598/31 to control unit wiring harness. The engine control unit remains disconnected.

Protected by copyright. Copying for private or commercial purposes, in part or in whole, is not permitted unless authorised by Volkswagen AG. Volkswagen AG does not guarantee or accept any liability with respect to the correctness of information in this document. Copyright by Volkswagen AG.
satelettronica

Note:

Gradual introduction of valves with new connector.

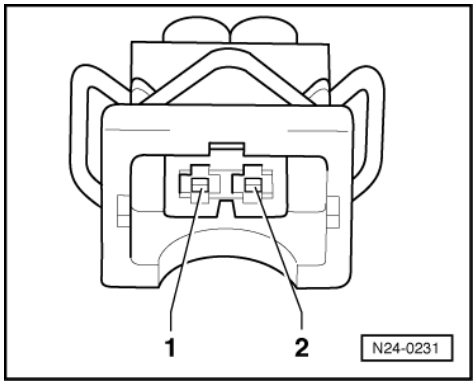

Vehicles with old connector shape

- -> Check wiring between test box and connector for open circuit according to current flow diagram.
  Contact 1+ socket 1
  Contact 1+ socket 2
  Contact 2+ socket 61
  Wire resistance: max. 1.5 ω

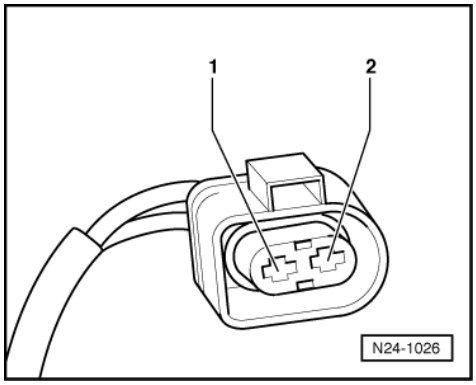

Vehicles with new connector shape

- -> Check wiring between test box and connector for open circuit according to current flow diagram.
  Contact 1+ socket 1
  Contact 1+ socket 2
  Contact 2+ socket 61
  Wire resistance: max. 1.5 ω

Continued for all engine codes

- Additionally check wires for short to one another, to vehicle earth and to battery positive.
  Specification: ∞ω
- Additionally check the wiring for short to battery positive or earth.
- Additionally check wires for short to one another.

If no fault is detected in the wiring:

- Renew engine control unit:

=> Repair group 23; Renewing, coding and adapting engine control unit; Renewing engine control unit Renewing, coding and adapting engine control unit Renewing engine control unit

Protected by copyright. Copying for private or commercial purposes, in part or whole, is not permitted unless authorised by Volkswagen AG. Volkswagen AG does not guarantee or accept any liability with respect to the correctness of information in this document. Copyright by Volkswagen AG.
satelettronica